SHARP SERVICE MANUAL

No. S90L460LE822E

LCD COLOUR TELEVISION

MODELS LC-60LE822E LC-60LE822ERU

In the interests of user-safety (Required by safety regulations in some countries) the set should be restored to its original condition and only parts identical to those specified should be used.

CONTENTS

SAFETY PRECAUTION
IMPORTANT SERVICE SAFETY PRECAUTION....i
Precautions for using lead-free solder....ii
End of life disposal....iii

OUTLINE
MAJOR SERVICE PARTS....iv

CHAPTER 1. SPECIFICATIONS
[1] SPECIFICATIONS....1-1

CHAPTER 2. OPERATION MANUAL
[1] Parts Name....2-1

CHAPTER 3. DIMENSIONS
[1] DIMENSIONS....3-1

CHAPTER 4. REMOVING OF MAJOR PARTS
[1] REMOVING OF MAJOR PARTS....4-1
[2] Caution Cleaning Glass....4-6
[3] How to replace the Touch Sensor key PWB....4-8

CHAPTER 5. TOUCH SENSOR UNIT POSITIONING FIGURE
[1] TOUCH SENSOR UNIT POSITIONING FIGURE....5-1

CHAPTER 6. ADJUSTMENT
[1] ADJUSTMENT PROCEDURE....6-1

CHAPTER 7. TROUBLESHOOTING TABLE
[1] TROUBLESHOOTING TABLE....7-1
[2] LED flashing specification at the time of the error....7-14

CHAPTER 8. MAJOR IC INFORMATIONS
[1] MAJOR IC INFORMATIONS....8-1

CHAPTER 9. OVERALL WIRING/BLOCK DIAGRAM
[1] OVERALL WIRING DIAGRAM....9-1
[2] SYSTEM BLOCK DIAGRAM....9-2

Parts Guide

Parts marked with "⚠" are important for maintaining the safety of the set. Be sure to replace these parts with specified ones for maintaining the safety and performance of the set.

SHARP CORPORATION

This document has been published to be used for after sales service only.
The contents are subject to change without notice.

SAFETY PRECAUTION

IMPORTANT SERVICE SAFETY PRECAUTION

■ **Service work should be performed only by qualified service technicians who are thoroughly familiar with all safety checks and the servicing guidelines which follow:**

■ WARNING

1. For continued safety, no modification of any circuit should be attempted.
2. Disconnect AC power before servicing.

CAUTION:
FOR CONTINUED PROTECTION AGAINST A RISK OF FIRE REPLACE ONLY WITH SAME TYPE FUSE.

F7000, F7001 (5A/250V)

■ BEFORE RETURNING THE RECEIVER (Fire & Shock Hazard)

Before returning the receiver to the user, perform the following safety checks:

3. Inspect all lead dress to make certain that leads are not pinched, and check that hardware is not lodged between the chassis and other metal parts in the receiver.
4. Inspect all protective devices such as non-metallic control knobs, insulation materials, cabinet backs, adjustment and compartment covers or shields, isolation resistor-capacitor networks, mechanical insulators, etc.
5. To be sure that no shock hazard exists, check for leakage current in the following manner.

- Plug the AC cord directly into a 220~240 volt AC outlet.
- Using two clip leads, connect a 1.5k ohm, 10 watt resistor paralleled by a 0.15μF capacitor in series with all exposed metal cabinet parts and a known earth ground, such as electrical conduit or electrical ground connected to an earth ground.
- Use an AC voltmeter having with 5000 ohm per volt, or higher, sensitivity or measure the AC voltage drop across the resistor.
- Connect the resistor connection to all exposed metal parts having a return to the chassis (antenna, metal cabinet, screw heads, knobs and control shafts, escutcheon, etc.) and measure the AC voltage drop across the resistor.
  All checks must be repeated with the AC cord plug connection reversed. (If necessary, a nonpolarized adaptor plug must be used only for the purpose of completing these checks.)
  Any reading of 1.05 V peak (this corresponds to 0.7 mA peak AC.) or more is excessive and indicates a potential shock hazard which must be corrected before returning the monitor to the owner.

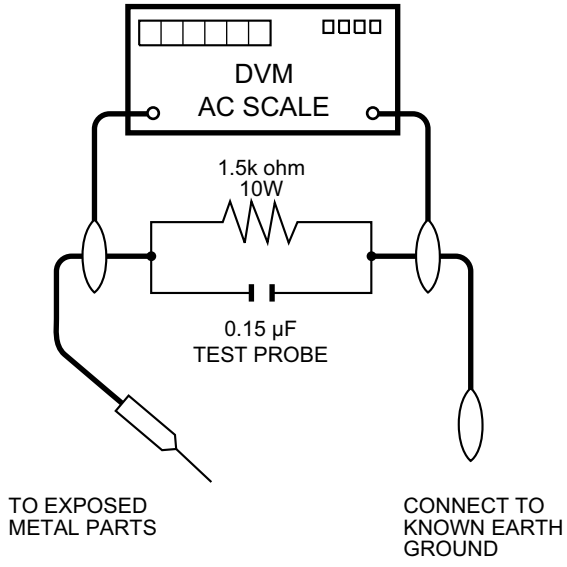

SAFETY NOTICE

Many electrical and mechanical parts in LCD color television have special safety-related characteristics.

These characteristics are often not evident from visual inspection, nor can protection afforded by them be necessarily increased by using replacement components rated for higher voltage, wattage, etc.

Replacement parts which have these special safety characteristics are identified in this manual; electrical components having such features are identified by "⚠" and shaded areas in the Replacement Parts List and Schematic Diagrams.

For continued protection, replacement parts must be identical to those used in the original circuit.

The use of a substitute replacement parts which do not have the same safety characteristics as the factory recommended replacement parts shown in this service manual, may create shock, fire or other hazards.

Precautions for using lead-free solder

■Employing lead-free solder

- “PWBs” of this model employs lead-free solder. The LF symbol indicates lead-free solder, and is attached on the PWBs and service manuals. The alphabetical character following LF shows the type of lead-free solder.

  Example:

LFa

Sn-Ag-Cu

Indicates lead-free solder of tin, silver and copper.

LFa/a

Sn-Ag-Cu

Indicates lead-free solder of tin, silver and copper.

■Using lead-free wire solder

- When fixing the PWB soldered with the lead-free solder, apply lead-free wire solder. Repairing with conventional lead wire solder may cause damage or accident due to cracks.

  As the melting point of lead-free solder (Sn-Ag-Cu) is higher than the lead wire solder by 40 °C, we recommend you to use a dedicated soldering bit, if you are not familiar with how to obtain lead-free wire solder or soldering bit, contact our service station or service branch in your area.

■Soldering

- As the melting point of lead-free solder (Sn-Ag-Cu) is about 220 °C which is higher than the conventional lead solder by 40 °C, and as it has poor solder wettability, you may be apt to keep the soldering bit in contact with the PWB for extended period of time. However, Since the land may be peeled off or the maximum heat-resistance temperature of parts may be exceeded, remove the bit from the PWB as soon as you confirm the steady soldering condition.

  Lead-free solder contains more tin, and the end of the soldering bit may be easily corroded. Make sure to turn on and off the power of the bit as required.

  If a different type of solder stays on the tip of the soldering bit, it is alloyed with lead-free solder. Clean the bit after every use of it.

  When the tip of the soldering bit is blackened during use, file it with steel wool or fine sandpaper.

- Be careful when replacing parts with polarity indication on the PWB silk.

Lead-free wire solder for servicing

Part No.	★	Description	Code
ZHNDAi123250E	J	ϕ0.3mm 250g (1roll)	BL
ZHNDAi126500E	J	ϕ0.6mm 500g (1roll)	BK
ZHNDAi12801KE	J	ϕ1.0mm 1kg (1roll)	BM

End of life disposal

Attention: Your product is marked with this symbol. It means that used electrical and electronic products should not be mixed with general household waste. There is a separate collection system for these products.

A. Information on Disposal for Users (private households)

1. In the European Union

Attention: If you want to dispose of this equipment, please do not use the ordinary dust bin!

Used electrical and electronic equipment must be treated separately and in accordance with legislation that requires proper treatment, recovery and recycling of used electrical and electronic equipment.
Following the implementation by member states, private households within the EU states may return their used electrical and electronic equipment to designated collection facilities free of charge*. In some countries* your local retailer may also take back your old product free of charge if you purchase a similar new one.
*) Please contact your local authority for further details.

If your used electrical or electronic equipment has batteries or accumulators, please dispose of these separately beforehand according to local requirements.

By disposing of this product correctly you will help ensure that the waste undergoes the necessary treatment, recovery and recycling and thus prevent potential negative effects on the environment and human health which could otherwise arise due to inappropriate waste handling.

2. In other Countries outside the EU

If you wish to discard this product, please contact your local authorities and ask for the correct method of disposal.

For Switzerland: Used electrical or electronic equipment can be returned free of charge to the dealer, even if you don't purchase a new product. Further collection facilities are listed on the homepage of www.swico.ch or www.sens.ch.

B. Information on Disposal for Business Users

1. In the European Union

If the product is used for business purposes and you want to discard it:

Please contact your SHARP dealer who will inform you about the take-back of the product. You might be charged for the costs arising from take-back and recycling. Small products (and small amounts) might be taken back by your local collection facilities.

For Spain: Please contact the established collection system or your local authority for take-back of your used products.

2. In other Countries outside the EU

If you wish to discard of this product, please contact your local authorities and ask for the correct method of disposal.

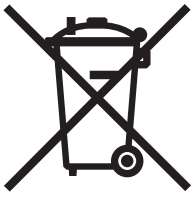

For EU: The crossed-out wheeled bin implies that used batteries should not be put to the general household waste! There is a separate collection system for used batteries, to allow proper treatment and recycling in accordance with legislation. Please contact your local authority for details on the collection and recycling schemes.

For Switzerland: The used battery is to be returned to the selling point.

For other non-EU countries: Please contact your local authority for correct method of disposal of the used battery.

OUTLINE

MAJOR SERVICE PARTS

■PWB UNIT

Ref No.	Parts Code	Description
N	DKEYDF455FM07	MAIN Unit (*1)
N	DUNTKF494FM02	R/C, LED Unit
N	DUNTKF493FM03	ICON Unit
N	DUNTKF493FM04	LOGO Unit
N	RUNTKA761WJQZ	TOUCH SENSOR Key Unit(*2)
N	RUNTKA729WJQZ	POWER/LED CONTROL Unit
N	RUNTK4512TPZA	LCD CONTROL Unit

NOTE: (*1) Replace MAIN Unit (DKEYDF455FM07) in case of IC8401 or IC3302 failure.

(*2) TOUCH SENSOR Key Unit (RUNTKA761WJQZ) reuse will be impossible, once it is stuck on front cabinet and exfoliates.

Therefore, please exchange of a TOUCH SENSOR Key Unit in the case of front cabinet exchange.

■OTHER UNIT

Ref No.	Parts Code	Description
N	R1LK600D3LW20Z	60" LCD Panel Module Unit

■IC FOR EXCLUSIVE USE OF THE SERVICE

Ref No.	Parts Code	Description	Q'ty
IC501	RH-iXD108WJQZS	IC 24LC21AT-I/SN	1
IC2002	RH-iXC786WJNJQ	IC R5F364A6NFB	1

■SERVICE JIGS

Ref No.	Parts Code	Description	Q'ty
N	QCNW-G616WJQZ	Main Unit to LCD Control Unit (LW)	1
N	QCNW-G625WJQZ	Main Unit to Power Unit (PL)	1
N	QCNW-H184WJQZ	Main Unit to Power Unit (PD)	1
N	QCNW-H185WJQZ	Main Unit to Power (LED Drive) Unit (LB)	1
N	QCNW-K594WJQZ	Main Unit to R/C, LED Unit (RA)	1
N	QCNW-K595WJQZ	Main Unit to Speaker (SP)	1
N	QCNW-K596WJQZ	Main Unit to Icon Unit (RL)	1
N	QCNW-K597WJQZ	Main Unit to Woofer (SB)	1

CHAPTER 1. SPECIFICATIONS

[1] SPECIFICATIONS

Item			LCD COLOUR TV (60"/152 cm), LC-60LE822E, LC-60LE822ERU
LCD panel			152 cm (60") X-Gen panel
Resolution			1,920 x 1,080 x 4 dots
Video colour system			PAL/SECAM/NTSC 3.58/NTSC 4.43/PAL 60
TV function	TV-standard	Analogue	CCIR (B/G, I, D/K, L/L')
		Digital	DVB-T (2K/8K OFDM), DVB-C, DVB-S/S2
	Receiving channel	VHF/UHF	IR A ch_E69 ch (Digital), E2_E69 ch, F2_F10 ch, I21_I69 ch, IR A_IR J ch
		CATV	Hyper-band, S1_S41 ch
		Satellite	950_2150 MHz*3
	TV-tuning system		Auto Preset 999 ch (non-Nordic [DTV]), Auto Preset 9999 ch (Nordic [DTV]), Auto Preset 99 ch (ATV), Auto Label, Auto Sort, Auto Preset 9999 ch (SAT)
	STEREO/BILINGUAL		NICAM/A2
Audio amplifier			10 W x 2/15 W x 1
Speaker			(234 mm x 22 mm) x 2/Ø 110 mm
Terminals	Antenna		UHF/VHF 75 Ω Din type (analogue & digital), Satellite 75 Ω F type (DVB-S/S2)
	RS-232C		D-Sub 9 pin male connector
	EXT 1		SCART (AV input, Y/C input, RGB input, TV output)
	EXT 2		RCA pin (AV input/AUDIO L/R)
	EXT 3		15 pin mini D-sub
	HDMI 1 (EXT 4)		HDMI (ARC)
	HDMI 2 (EXT 5)		HDMI
	HDMI 3 (EXT 6)		HDMI
	HDMI 4 (EXT 7)		HDMI
	USB		USB
	ETHERNET (10/100)		Home network connector
	HDMI 2/EXT 3 AUDIO (L/R)		Ø 3.5 mm jack*1
	DIGITAL AUDIO OUTPUT		Optical S/PDIF digital audio output
	C. I. (Common Interface)		EN50221, R206001, CI Plus specification
	OUTPUT/Headphones		RCA pin (AUDIO R/L)/Ø 3.5 mm jack (audio output)
OSD language			Czech, Danish, Dutch, English, Estonian, Finnish, French, German, Greek, Hungarian, Italian, Latvian, Lithuanian, Norwegian, Polish, Portuguese, Russian, Slovak, Slovene, Spanish, Swedish, Turkish, Ukrainian
Power requirement			AC 220_240 V, 50 Hz
Power consumption (method IEC62087)			198 W (0.2 W standby*2)
Weight			42.0 kg (without stand), 52.9 kg (with stand)
Operating temperature			0 °C to + 40 °C

*1 The HDMI 2 and EXT 3 terminals can both use the same audio input terminal.
*2 Standby power consumption applies when the TV is set to not receive EPG data.
*3 The satellite channel's frequency may vary according to satellites and antennas.
- As a part of our policy of continuous improvement, SHARP reserves the right to make design and specification changes for product improvement without prior notice. The performance specification figures indicated are nominal values of production units. There may be some deviations from these values in individual units.

CHAPTER 2. OPERATION MANUAL

[1] Parts Name

TV (front view)

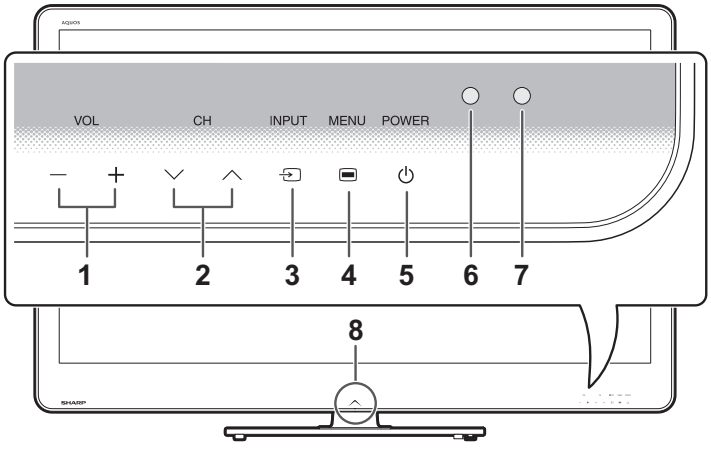

1 **VOL** −/+ (Volume buttons)
2 **CH** ∨/∧ (Programme [channel] buttons)
3 **INPUT** (Input source button)
4 **MENU** (Menu button)
5 **POWER** ⏻ (Power button)
6 OPC sensor
7 Remote control sensor
8 Illumination LED

TV (rear view)

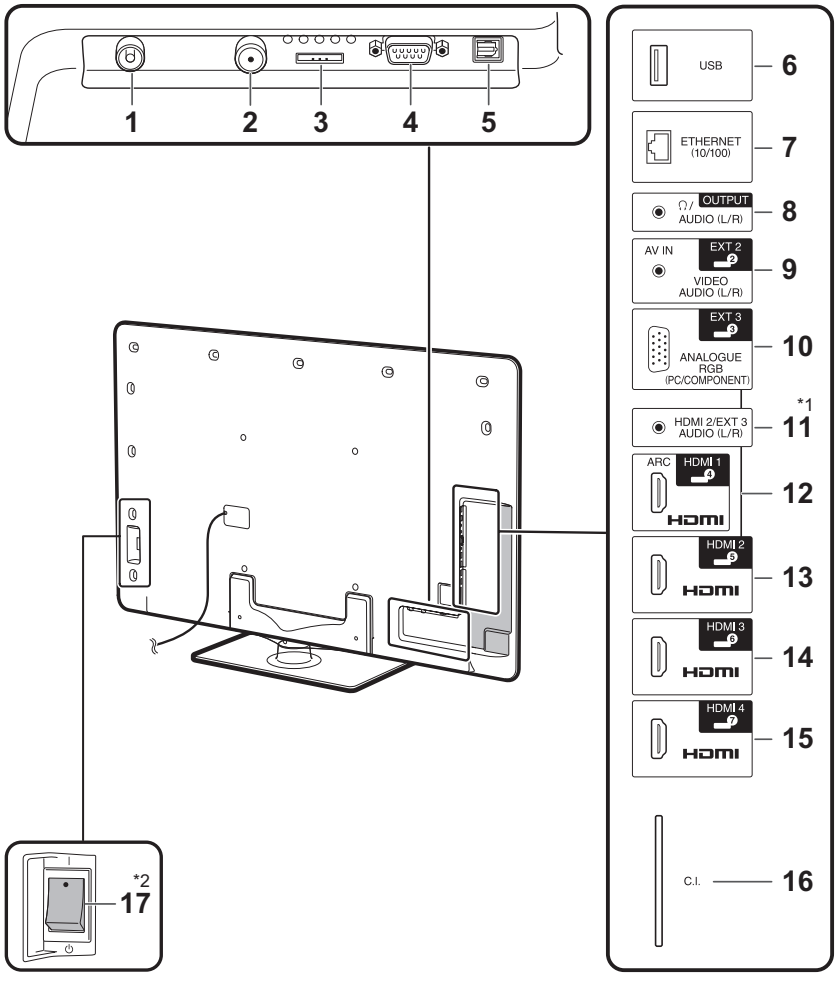

1 Antenna terminal
2 Satellite antenna terminal
3 EXT 1 (RGB) terminal
4 RS-232C terminal
5 DIGITAL AUDIO OUTPUT terminal
6 USB terminal
7 ETHERNET (10/100) terminal
8 OUTPUT (Headphones/AUDIO (L/R)) terminal
9 EXT 2 (AV IN/VIDEO/AUDIO (L/R)) terminal
10 EXT 3 (ANALOGUE RGB (PC/COMPONENT)) terminal
11 HDMI 2/EXT 3 AUDIO (L/R) jack
12 HDMI 1 (HDMI/ARC) terminal
13 HDMI 2 (HDMI) terminal
14 HDMI 3 (HDMI) terminal
15 HDMI 4 (HDMI) terminal
16 C.I. (COMMON INTERFACE) slot
17 MAIN POWER switch

WARNING

- Excessive sound pressure from earphones and headphones can cause hearing loss.
- Do not set the volume at a high level. Hearing experts advise against extended listening at high volume levels.

*1 The HDMI 2 and EXT 3 terminals can both use the same audio input terminal (HDMI 2/EXT 3 AUDIO (L/R)). However, the proper item must be selected in the "Audio select" menu.
*2 When the MAIN POWER switch is turned off (⏻), the amount of electric power consumed will be reduced to 0.01 W or less. However, unlike when unplugging the AC cord, the power is not completely disconnected.

Remote control unit

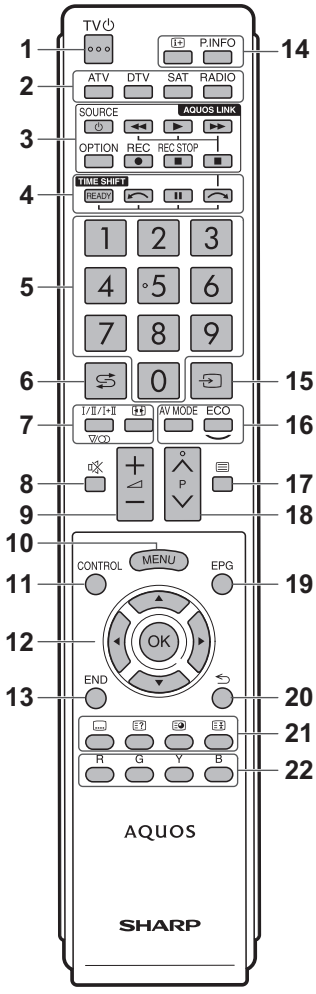

1 TV ⏻ (Standby/On)

2 ATV
Press to access conventional analogue TV mode.

DTV
Press to access digital TV mode.

SAT
Press to access satellite mode.

RADIO
DTV/SAT: Switch between radio and data mode.
- When only data broadcasting (no radio broadcasting) is transmitted by DVB, the radio broadcasting will be skipped.

3 AQUOS LINK buttons
If external equipment such as a AQUOS BD player is connected via HDMI cables and is AQUOS LINK compatible, you can use these AQUOS LINK buttons.

4 TIME SHIFT (READY/↶/ ⏸/↷)
Press to temporarily record a programme you are watching if you want to interrupt a programme to answer a phone call, for example.

5 Numeric buttons 0_9
Set the channel.
Enter desired numbers.
Set the page in teletext mode.
- When the five Nordic countries (Sweden, Norway, Finland, Denmark or Iceland) are selected in the country setting from "Auto installation", DTV services are four digits. When another country is selected, DTV services are three digits.

6 ⇆ (Flashback)
Press to return to the previously selected channel or external input.

7 I/II/I+II ▽/⊂⊃ (Sound mode)
Select a sound multiplex mode.

⊞ (Wide mode)
Select a wide mode.

8 🔇 (Mute)
TV sound on/off.

9 ◿ +/- (Volume)
Increase/decrease TV volume.

10 MENU
"Menu" screen on/off.

11 CONTROL
Press to display the panel to operate some functions on the screen.

12 ▲/▼/◀/▶ (Cursor)
Select a desired item on the setting screen.

OK
Execute a command within the "Menu" screen.
ATV/DTV/SAT: Display "CH list" when no other "Menu" screen is running.

13 END
Exit the "Menu" screen.

14 ⓘ+ (Display information)
Press to display the station information (channel number, signal, etc.) in the upper right corner of the screen.

P. INFO
Press to display programme information transmitted through digital video broadcasting (DTV/SAT only).

15 ⇥ (INPUT)
Select an input source.

16 AV MODE
Select a video setting.

ECO (Standard/Advanced/Off)
Select "Energy save" setting.

17 ▤ (Teletext)
ATV: Display analogue teletext
DTV/SAT: Select MHEG-5 and teletext for DTV/SAT.

18 P∧/∨
Select the TV channel.

19 EPG
DTV/SAT: Display the EPG screen

20 ⮌ (Return)
Return to the previous "Menu" screen.

21 Buttons for useful operations

⊡ (Subtitle)
Switch subtitle languages on/off.

⊡? (Reveal hidden teletext)

⊡◉ (Subpage)

⊡⊞ (Freeze/Hold)
Press to freeze a moving image on the screen.
Teletext: Stop updating teletext pages automatically or release the hold mode.

22 R/G/Y/B (Colour) buttons
The coloured buttons are correspondingly used to select the coloured items on the screen (e.g., EPG, MHEG-5, teletext).

CHAPTER 3. DIMENSIONS

[1] DIMENSIONS

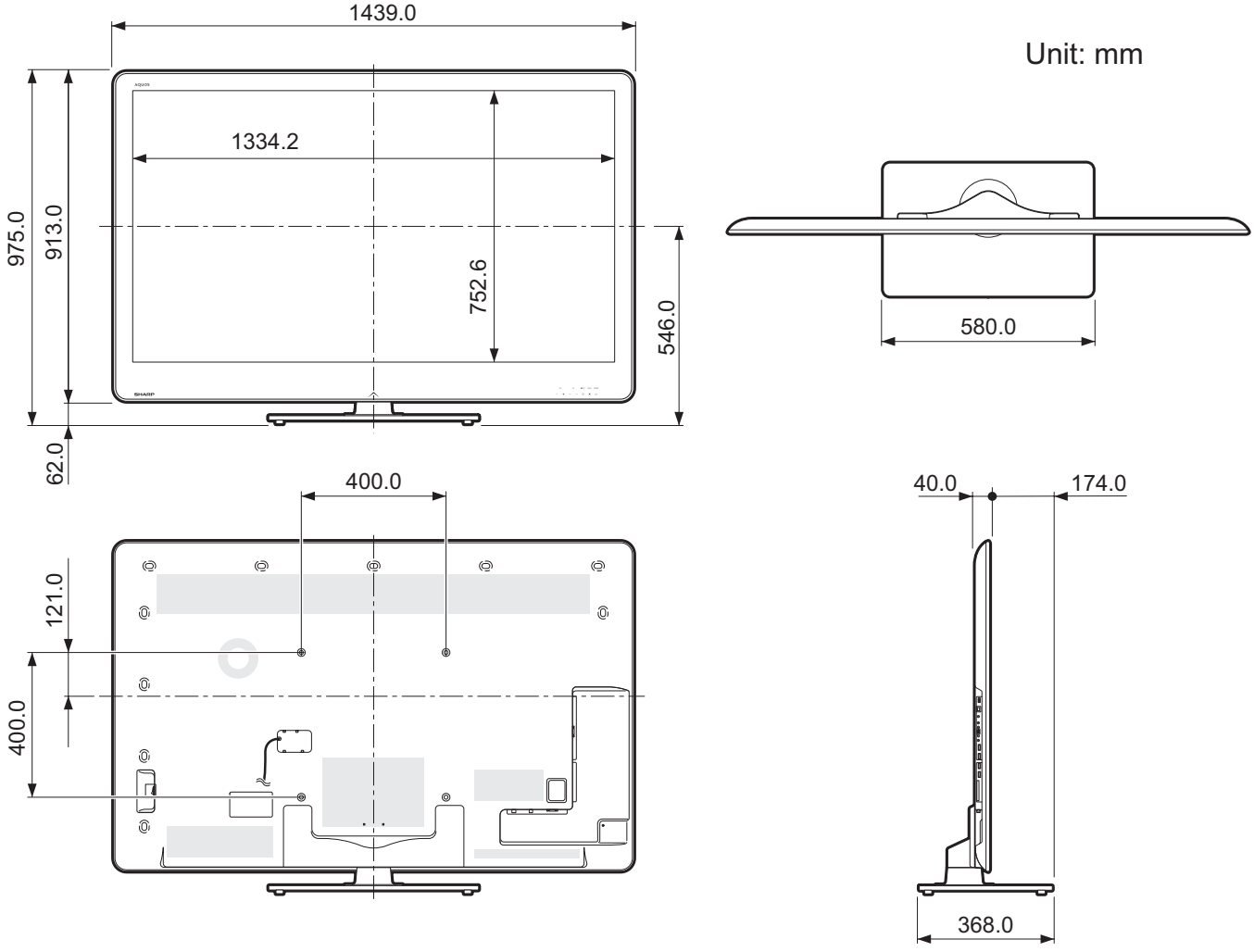

NOTE

- Dimensions do not include protrusions such as screws and some parts.

CHAPTER 4. REMOVING OF MAJOR PARTS

[1] REMOVING OF MAJOR PARTS

1. Removing of Stand Unit and Rear Cabinet Ass'y.

1. Remove the 3 lock screw ① and detach the Support Cover ②.
2. Remove the 4 lock screws ③ and detach the Stand Unit ④.
3. Remove the 1 lock screw ⑤ and detach the AC Cord Cover ⑥.
4. Disconnect AC Cord ⑪.
5. Remove the 4 lock screws ⑦, 5 lock screws ⑧, 2 lock screws ⑨ and 18 lock screws ⑩ and detach the Rear Cabinet Ass'y.

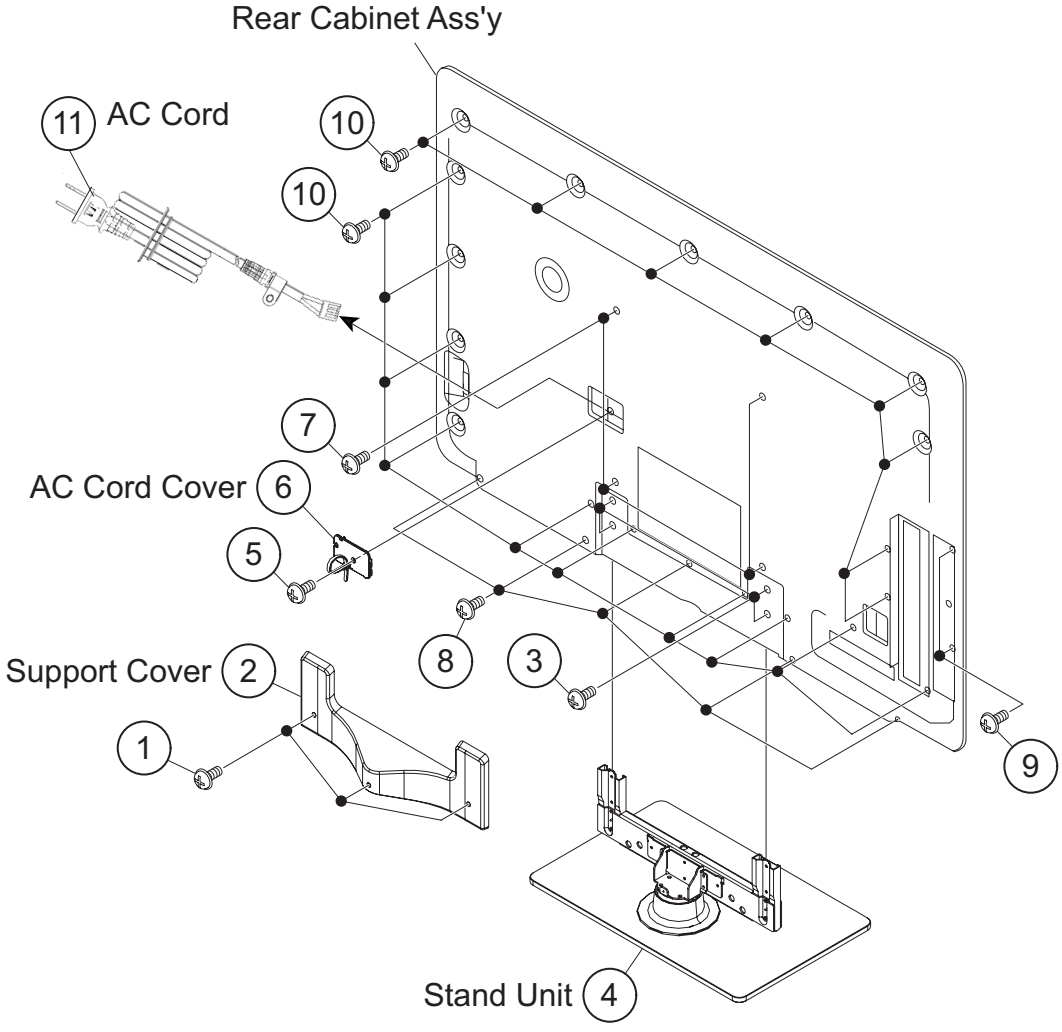

2. Removing of Speaker-L/R.

1. Remove the 2 lock screws ① and detach the Stand Cover ②.
2. Disconnect SP wire.
3. Detach the Speaker-L ③, Speaker-R ④.
4. Detach the Insulation Sheet (AC) ⑤

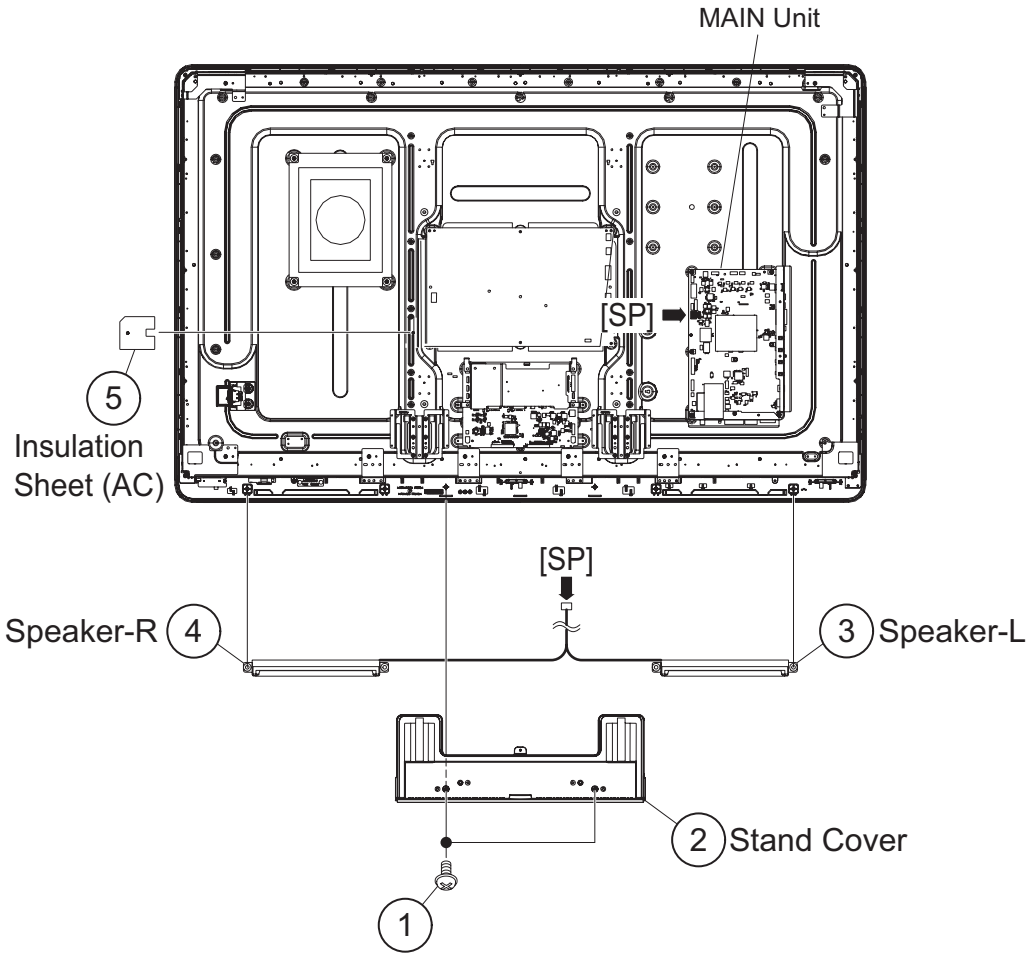

3. Removing of Connectors

1. Disconnect the following connectors from the MAIN Unit. (SB, LB, PD, LW, RA, RL)
2. Disconnect the following connectors from the POWER/LED Drive Unit. (AS, L1, L2, LB, PD, PL)
3. Disconnect the following connectors from the LCD Control Unit. (LW, PL)

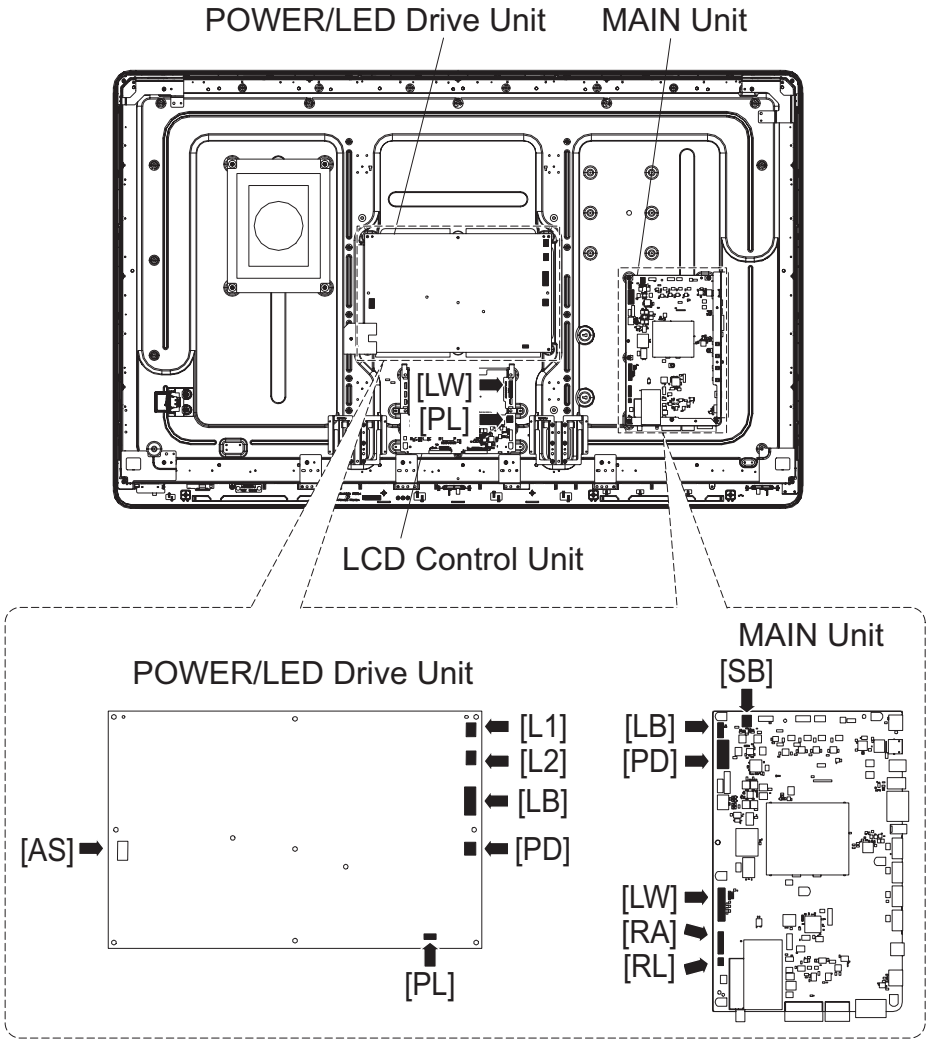

4. Removing of MAIN Unit, POWER/LED Drive Unit, Woofer, Stand Angle,60” LCD Panel Module Unit.

1. Remove the 6 lock screws ① and detach the MAIN Unit ②.
2. Remove the 2 lock screws ③ and detach the Terminal Angle (Bottom) ④.
3. Remove the 2 lock screws ⑤ and detach the Terminal Angle (Side) ⑥.
4. Remove the 6 lock screws ⑦ and detach the POWER/LED Drive Unit ⑧.
5. Remove the 4 lock screws ⑨ and detach the Woofer ⑩.
6. Remove the 1 lock screw ⑪ and detach the LCD Angle (Bottom-R) ⑫.
7. Remove the 4 lock screws ⑬ and detach the LCD Angle (Top-L) ⑭.
8. Remove the 2 lock screws ⑮ and detach the LCD Angle (Top-R) ⑯.
9. Remove the 2 lock screws ⑰ and detach the LCD Angle (Bottom-L) ⑱.
10. Remove the 12 lock screws ⑲ and detach the 2 Stand Angle ⑳.
11. Remove the 4 lock screws ㉑ and detach the 4 FIX Angle (B-MA) ㉒.
12. Remove the 2 lock screws ㉓ and detach the Back Light Chassis Support Angle ㉔.
13. Remove the 9 lock screws ㉕ and detach the 60” LCD Panel Module Unit ㉖.
14. Remove the 2 lock screws ㉗ and detach the ECO Switch with Holder ㉘.

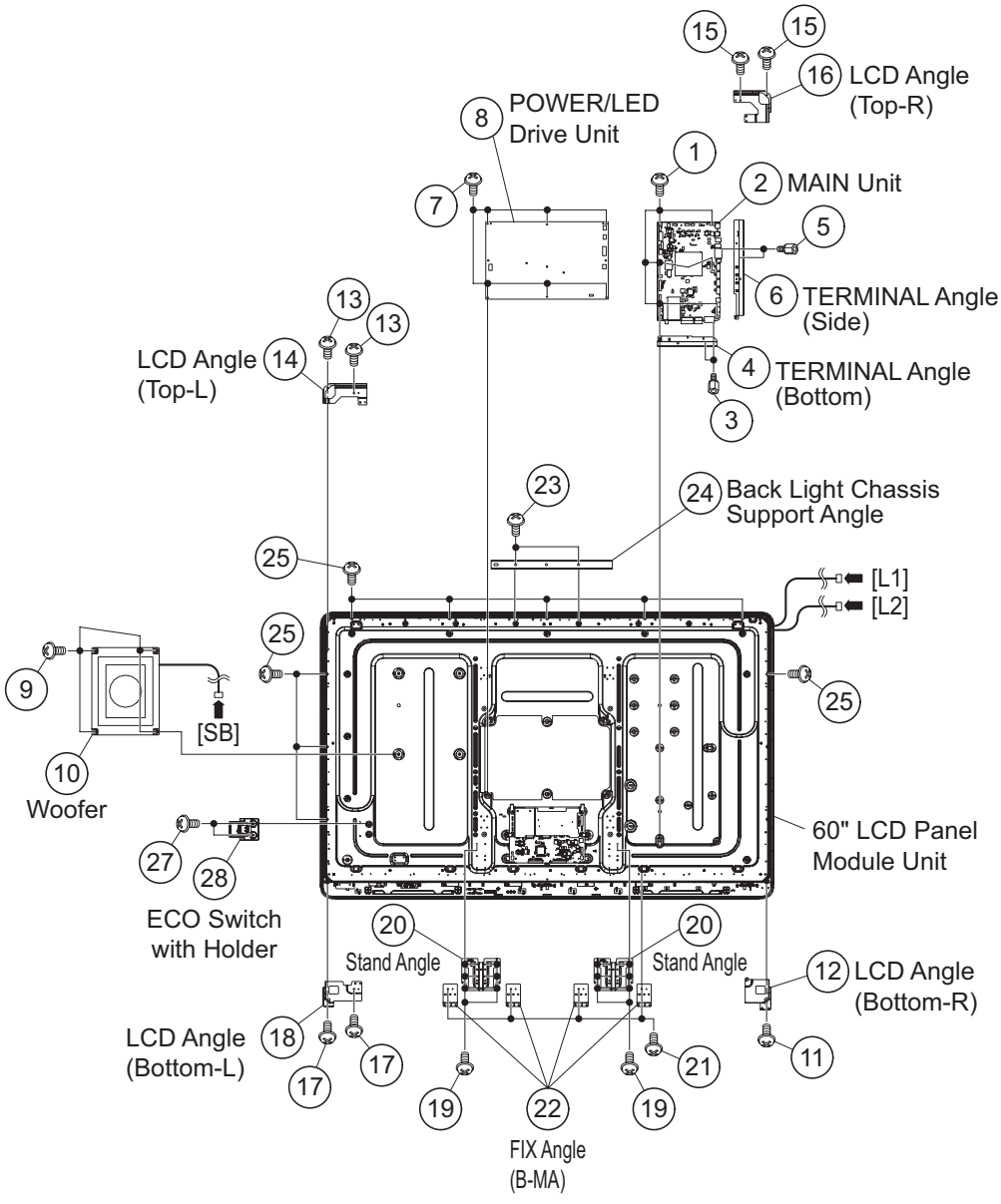

5. Removing of R/C, LED Unit, ICON Unit, LOGO Unit, Front Cabinet Ass'y, Glass Front Panel Ass'y, TOUCH SENSOR KEY Unit.

1. Detach the R/C, LED Unit ①.
2. Detach the ICON Unit ②.
3. Detach the LOGO Unit ③.
4. Remove the 25 Hooks ④ and detach the Front Cabinet Ass'y ⑤
5. Detach the Glass Front Panel Ass'y ⑥.
6. Detach the Touch Sensor Key Unit ⑦.

NOTE: The Touch Sensor Key unit ⑦ removed once is not reusable.

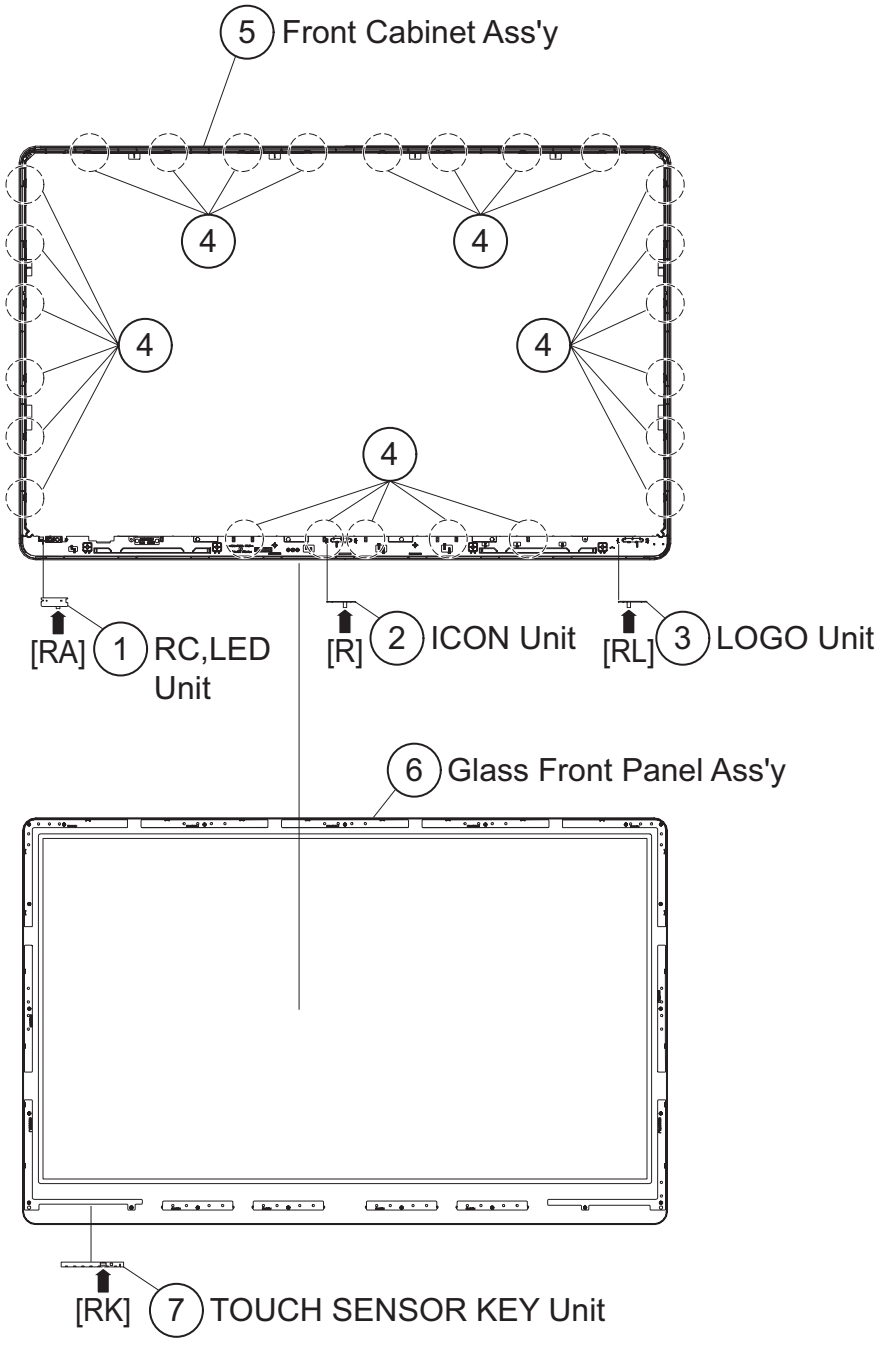

[2] Caution Cleaning Glass

1. Glass handling

CAUTION: (1) As for handling, wear clean gloves, protective footwear- and mask.

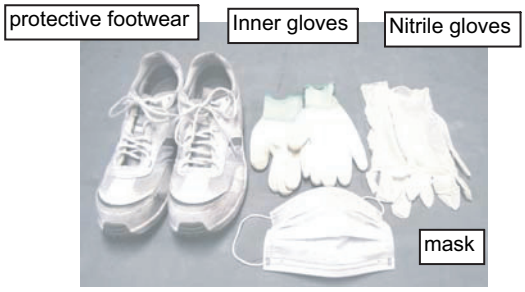

(2) Inner gloves are covered in the Nitrile gloves.

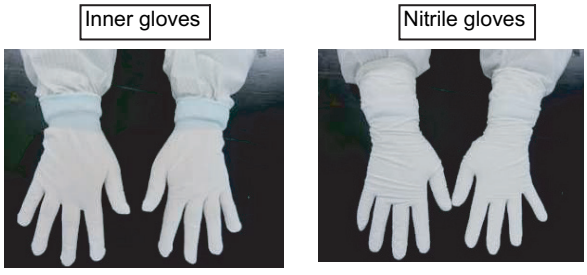

(3) Nitrile gloves are exchanged with the following standard.

- When it touched a face and so on.
- When another work was done.
- By the work of fifty times.
- In the time for recess.
- When it became dirty.
- When it tore.

(4)Have a designated place at the time of the handling.

Back side : Black print part

Front side : Protection tape part

<u>You must not have a clear surface.</u>

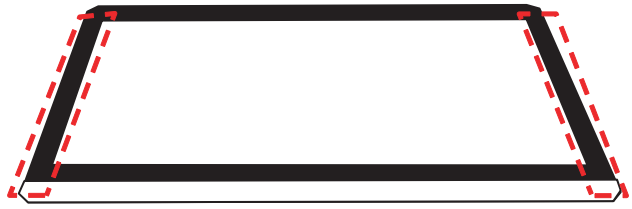

(5) Two people have handling equally by the work.

(Maintain it so that glass is not warped.)

(6) When it is put horizontally, it is put on the flat mat.

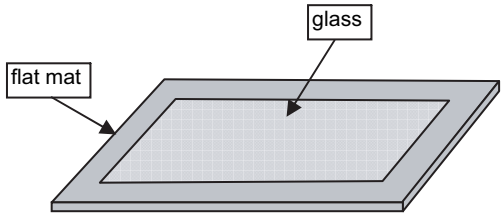

(7) A cushion material is put between glass.

It doesn't touch it [the front and the front].

It can be put to two glass.

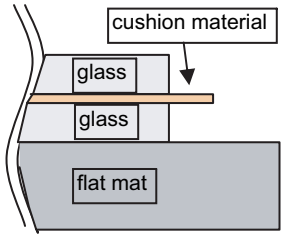

(8) It has a module part before the CAB-B installation.

(It has a module part.)

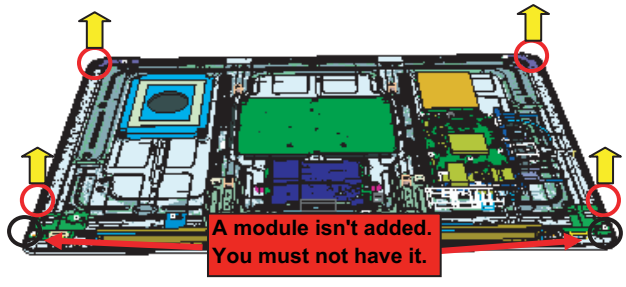

2. Glass cleaning

CAUTION: (1) Visual inspection is done on the black mat.

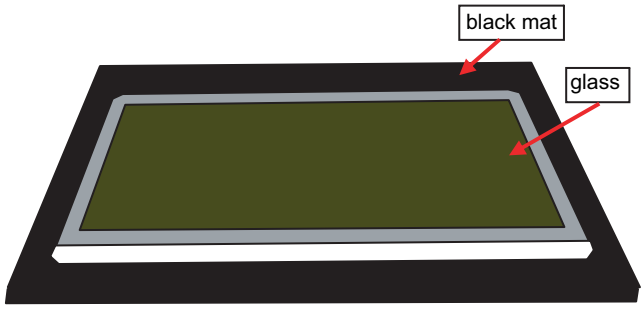

(2) Dust and trash are taken with an air blow.

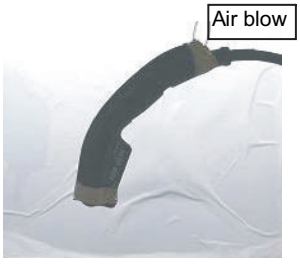

(3) Dirt is wiped out with cloth.

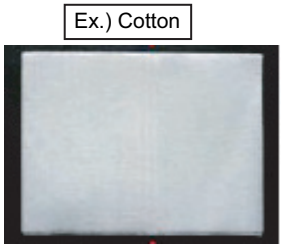

(4) When dirt doesn't clean, it is wiped out with Alcohol.

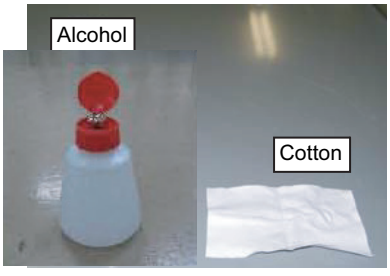

(5) Dirt is wiped out with the Ethanol and clean cloth.
When wipe off a dirt the trace which wiped do not be left.

[3] How to replace the Touch Sensor key PWB

1. Replace the touch sensor key PWB in a clean room.
   Be sure to remove the dust from the unit before carrying it into the clean room.
2. Remove the touch sensor key PWB from the front glass.
3. Clean the bonding surface with alcohol.
   Depending on the dirt, water solution of 80%vol can be effective.
4. Product Manual Touch Sensor Key with ITO (Transparent Electrode)

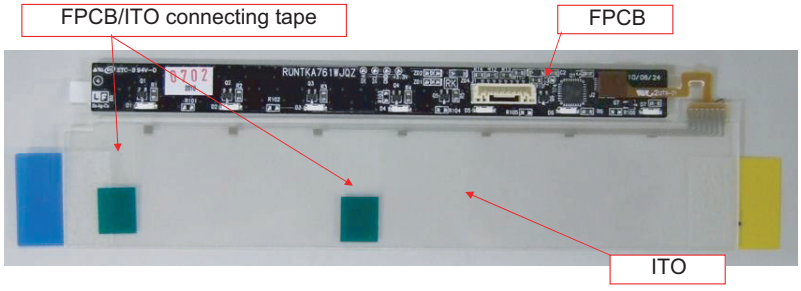

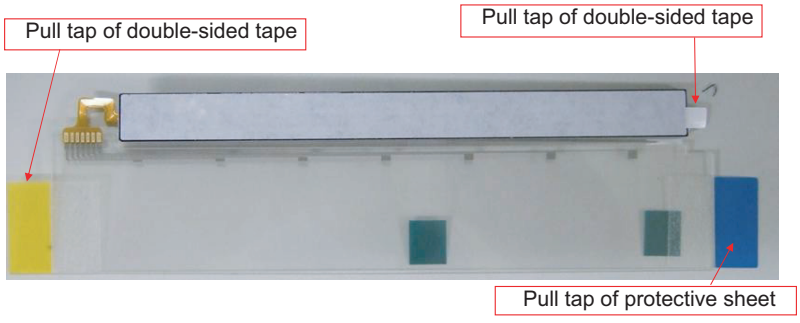

i) Remove the touch sensor key from the front glass.

* When peeling the ITO section, check that there is no glue residue on the front glass.
  If glue residue, dirt, fingerprints, etc. are found, wipe them off with anhydrous alcohol.
  Do not apply anhydrous alcohol to the double-sided tape on the metal part attaching to the glass.

ii) Adhere the ITO section to the front glass. (Use the positioning jig.)

Tape fixing the FPCB and ITO sections (Adhered by the supplier)

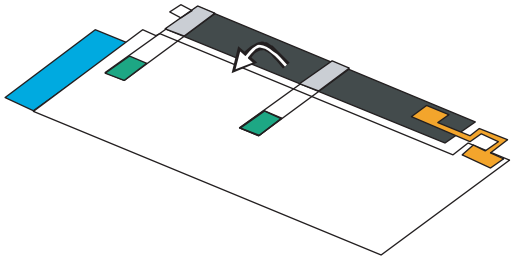

iii-1. Peel the release paper of the double-sided tape on the ITO section.
iii-2. Slowly adhere it from the end using a roller. (Position the touch sensor using the jig.)
* Check that there are no bubbles in the ITO section after adhered.
* Adhering error: ±1.0mm

iii) Adhere the FPCB section to the front glass.

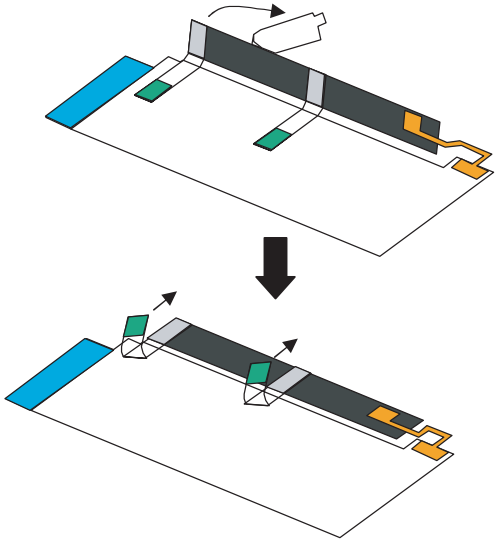

iv-1. Lift the FPCB section to peel the release paper of the double-sided tape.
* Be careful not to apply stress to the joint of FPCB and ITO.

iv-2. Adhere the FPCB section to the front glass.
* Be careful not to apply stress to the joint of FPCB and ITO.

iv-3. Peel the tape fixing the FPCB and ITO sections.

5. Attach the touch unit bonding procedure.

It includes peeling of the protective sheet.

How to mount the touch sensor

i) Adhere after positioned using the positioning jig.

ii) Peel the protective sheet by means of the pull tap for peeling the protective sheet.

iii) Adhere the FPCB to the glass. (Do not warp the FPCB if possible.)

Pull tap for peeling the protective sheet of the double-sided tape in the FPCB section.

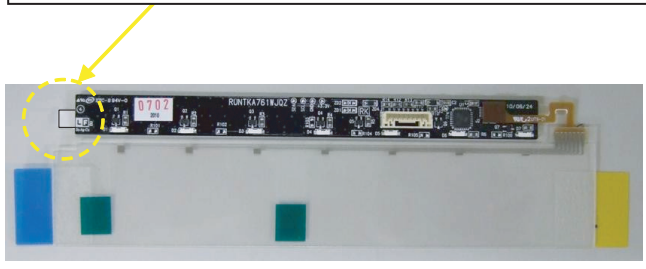

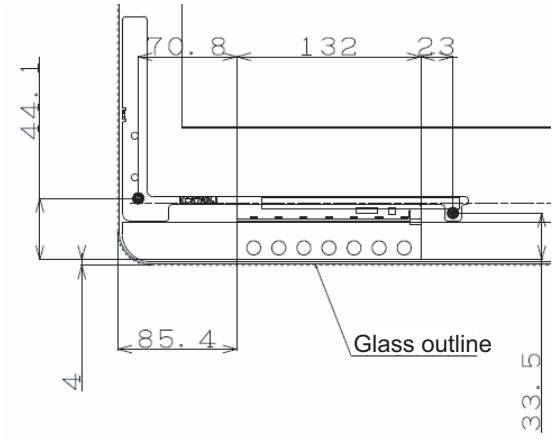

iv) Peel the protective sheet of the OCA.

Lift the ITO section, then peel the protective sheet by about half by means of the pull tap.

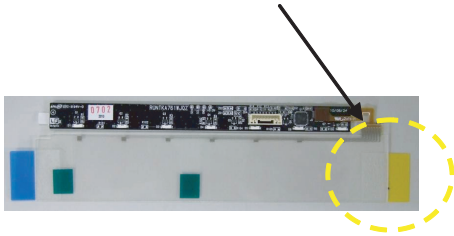

* Peeling it completely reduces workability.
  Check the order due to workability.

v) Contact the FPCB and joint end of the transparent electrode film with the glass.

* Grasp the opposite end. Note that the ITO is positioned by adhering.

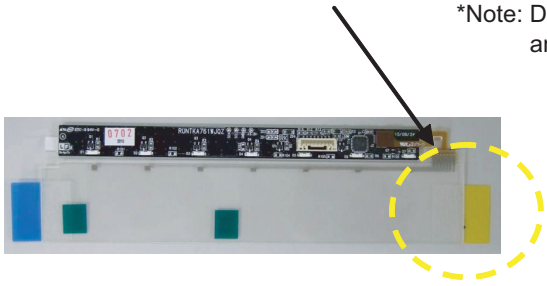

*Note: Do not bend the PWB (FPCB section)
and sheet (ITO section).

vi) Adhere the transparent electrode completely.

Peel the front protective sheet.

If bubbles are found, press those portions with glass cleaning cloth, etc. to remove them as much as possible.

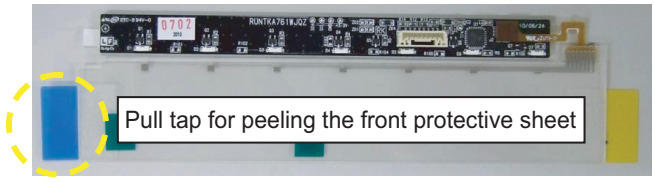

- Use a rubber roller since pressure exerted by it removes bubbles easily. See photo below.

- For the TOUCH SENSOR KEY Unit positioning figure, see page 5-1.

— MEMO —

CHAPTER 5. TOUCH SENSOR UNIT POSITIONING FIGURE

[1] TOUCH SENSOR UNIT POSITIONING FIGURE

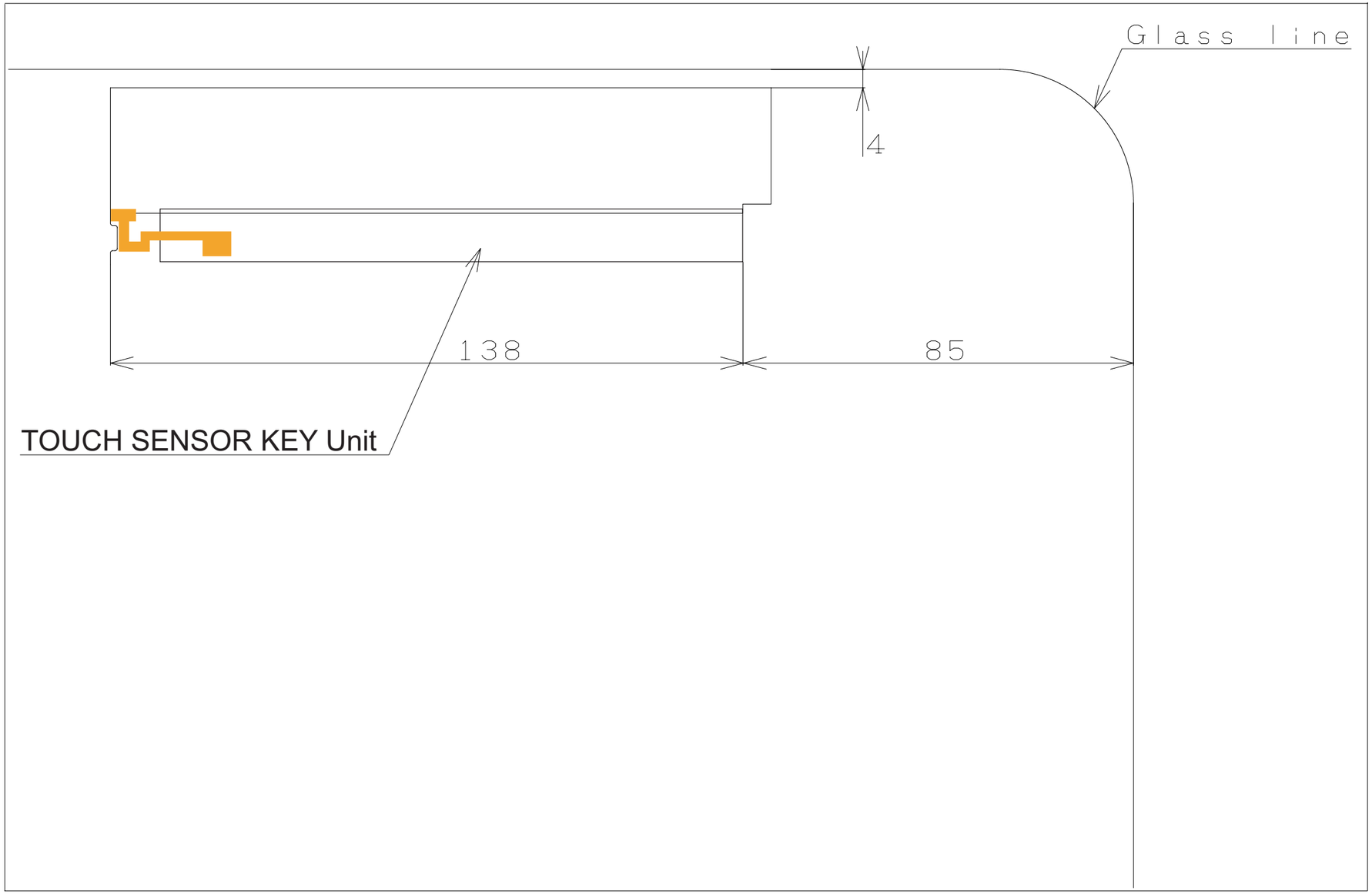

— MEMO —

CHAPTER 6. ADJUSTMENT

[1] ADJUSTMENT PROCEDURE

1. Adjustment method after PWB and/or IC replacement due to repair

The unit is set to the optimum at the time of shipment from the factory.

If any value should become improper or any adjustment is necessary due to the part replacement, make an adjustment according to the following procedure.

1. Procure the following units in order to replace the main unit

   MAIN UNIT: DKEYDF455FM07

NOTE: [Caution when replacing ICs in the main unit (IC501, IC2002)]

The above ICs are EEPROMs storing the EDID data of PC, and Monitor microcomputer.

Before replacing the relevant part, procure the following parts in which the data have been rewritten.

IC501	RH-iXD108WJQZS	PC EDID
IC2002	RH-iXC786WJNJQ	Monitor microcomputer

NOTE: [Caution when replacing ICs in the main unit (IC8401, IC3302)]

When replacing either IC8401 or IC3302, exchange MAIN units for DKEYDF455FM07

Each part should not be individually exchanged.

IC8401	RH-iXC147WJQZQ	Flash
IC3302	RH-iXC951WJN1Q	Main CPU

NOTE: HDMI ROM Writing

After replacing IC1504, execute “HDMI EDID WRITE” on the page 5/21

Please execute it after checking MODEL NAME & INCH SIZE. are correct.

IF MODEL NAME & INCH SIZE. are not correct, set them previously. (Refer to 2)

The ROM data based on information of MODEL NAME & INCH SIZE

1) Enter the process adjustment mode in TV.
2) Use the cursor keys (▲/▼) and CH keys (︿ / ﹀) of R/C to select the item [HDMI EDID WRITE] on the page 5/21.

2. After replacing the LCD panel or LCD control/MAIN UNIT.
   1) Enter the process adjustment mode in TV.
   2) Use the cursor keys (▲/▼) and CH keys (︿ / ﹀) of R/C to select the item.
   3) Verify that the Model name is displayed.
   4) If the Model name doesn't match, select the values of the Model name with the VOL keys (+/-).
   5) After selection in Step 4), press the OK key, and it is completed with OK displayed.
   6) Use the cursor keys (▲/▼) and CH keys (︿ / ﹀) of R/C to select the item.
   7) Verify that the panel size is displayed.
   8) If the size doesn't match, select the values of the panel size with the VOL keys (+/-).
   9) After selection in Step 8), press the OK key, and it is completed with OK displayed.

3. After replacing the LCD panel or LCD control PWB, adjust the VCOM in the following procedure.
   1) Enter the process adjustment mode.
   2) Use the cursor keys (▲/▼) and CH keys (︿ / ﹀) of R/C to select the item [VCOM ADJ] on the page 10/21.
   3) Press the OK key to verify that the adjustment pattern is displayed.
   4) Use VOL keys (+/-) of R/C to adjust the flicker in the center of the screen to minimum.
   5) When the optimal state is achieved in Step 4, press the OK key to turn the pattern to OFF.

2. Notes of Touch sensor unit

Touch sensor unit (RUNTKA761WJQZ) is fixed directly in the module glass.

The unit cannot never be recycled when exfoliated from the module glass.

Therefore, please exchange the touch sensor units when the module glass is changed.

Please note the adhesion and mixing of dust for the module glass when the module glass and the touch sensor unit are exchanged.

Module glass
CPNLHA022WJ32

3. Method of shuts down for Power supply

Please execute the following procedures to shut down Power supply from the state of normal operation.

1) Keep touching the power supply key on the set for 5 seconds from the state of watching.
   * The screen disappears when power supply key is touched, but Keep pushing the power supply key.
2) A central icon lights between 500ms when the power supply shuts down.
   Please separate the finger from the power supply key when lighting of a central icon is confirmed

4. Entering and exiting the adjustment process mode

Please execute the following procedures to enter the adjustment process mode when the power supply shuts down.

1) While holding down the “VOL (-)” and “INPUT” keys on the set at once, touch the power supply key on the set.
   Please separate the fingers from key on the set when boot-up is confirmed with lighting of a central icon etc.
   After a while, The letter “K” appears on the screen. This state is in **Inspection mode.**
2) Next, hold down the “VOL (-)” and “CH (∨)” keys on the set at once.
   Multiple lines of blue characters appearing on the screen indicate that the set is now in **the adjustment Process mode.**
   If you fail to enter the adjustment process mode (the display is the same as normal startup), retry the procedure.
3) To exit the adjustment process mode after the adjustment is done, unplug the AC power cord to force off the power.
   (When the power is turned off with the remote controler, once unplug the AC power cord and plug it in again. In this case, wait for 10 seconds or so after unplugging.)

CAUTION: Use due care in handling the information described here lest the users should know how to enter the adjustment process mode.
If the settings are tampered with in this mode, unrecoverable system damage may result.

5. Remote controler key operation and description of display in adjustment process mode.

1. Key operation

Remote controler key	Main unit key	Remote controler key Main unit key Function
CH keys (∧ / ∨)	CH (∧ / ∨)	Moving an item (line) by one (UP/DOWN)
VOL keys (+/-)	VOL (+/-)	Changing a selected item setting (+1/-1)
Cursor (▲/▼)	—	Turning a page (PREVIOUS/NEXT)
Cursor (◀/▶)	—	Changing a selected line setting (+10/-10)
INPUT	INPUT	Input source switching (toggle switching) (TV→EXT1~9, USB)
OK	—	Executing a function
RETURN	—	Returning to a present page

Input mode is switched automatically when relevant adjustment is started so far as the necessary input signal is available.

6. Description of display

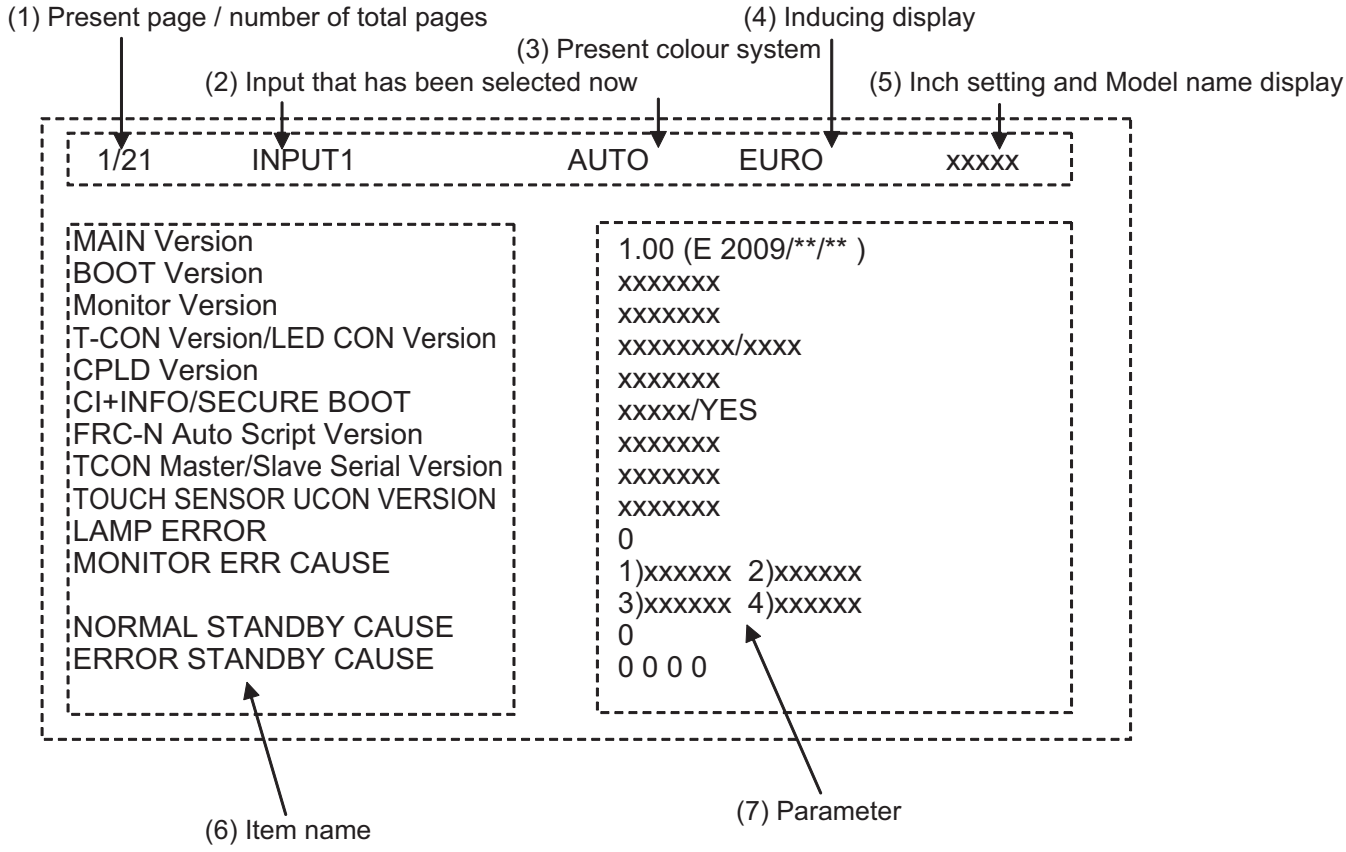

No.	Description	Display specification
(1)	Present page/number of total pages	2char/2char Decimal Number mark.
(2)	Input that has been selected now	TUNER/DTV/INPUT1/INPUT2/INPUT3/INPUT5/INPUT6/INPUT7
(3)	Present colour system	AUTO/N358/N443/PAL/SECAM/480i/580i/1080i/50 etc. ···
(4)	Inducing display	EUROPE
(5)	Inch setting and Model name display	Inch setting and Model name display
(6)	Item name	Max. 30 char
(7)	Parameter	Max. 60 char

7. Adjustment process mode menu

The character string in brackets [ ] will appear as a page title in the adjustment process menu header.

Page	Line	Item	Description	Remarks (adjustment detail, etc.)
1/21				
	1	MAIN Version	1xxx (xxxxx)	Main software version
	2	BOOT Version	xxxxxxx	BOOT Version.
	3	Monitor Version	xxxxxxx	Monitor software version
	4	T-CON Version/LED CON Version	xxxxxxxx/xxxx	T-CON/H.264 Version
	5	CPLD Version	xxxxxxx	CPLD Version.
	7	CI+INFO/SECURE BOOT	xxxxx/YES	CI+ Key Information/SECURE BOOT
	8	FRC-N Auto Script Version	xxxxxxx	
	9	TCON Master/Slave Serial Version	xxxxxxx	
	10	TOUCH SENSOR UCON VERSION	xxxxxxx	
	11	LAMP ERROR	0	Number of termination due to lamp error.
	12	MONITOR ERR CAUSE	1) xxxxxx 2) xxxxxx 3) xxxxxx 4) xxxxxx	Last error standby cause.
	13	NORMAL STANDBY CAUSE	0	Situation that became standby at the end. (Excluding the error)
	14	ERROR STANDBY CAUSE	0 0 0 0	Error standby cause
2/21				
	1	INDUSTRY INIT	Enter	Initialization to factory settings execution.
	2	INDUSTRY INIT (-Public)	OFF	Initialization to factory settings execution. (Public mode is excluded)
	3	PUBLIC MODE	OFF	Public mode ON/OFF setting
	4	Center Acutime	—	Main operating hours.
	5	RESET	OFF	Main operating hours reset.
	6	Backlight Acutime	—	Backlight operating hours.
	7	RESET	OFF	Backlight operating hours reset.
	8	LAMP ERROR RESET	OFF	Lamp error reset.
	9	ADJ PARAM SET	Enter	ADJ PARAM SET
	10	VIC XPOS	0	X-coordinate setting for VIC READ
	11	VIC YPOS	0	Y-coordinate setting for VIC READ
	12	VIC SIGNAL TYPE	MAIN	Signal type setting for VIC READ
	13	VIC READ	OFF	Picture level acquisition function (Level appears in green on the upper right)
3/21				
	1	TUNER ADJ	Enter	TUNER auto adjustment execution
	2	PAL+TUNER ADJ	Enter	PAL TUNER auto adjustment execution
	3	TUNER ADJ (SMPTE)	Enter	TUNER auto adjustment execution (SMPTE)
	4	PAL+TUNER ADJ (SMPTE)	Enter	PAL TUNER auto adjustment execution (SMPTE)
	5	TUNER ADJ (SMPTE CH57)	Enter	TUNER auto adjustment execution (SMPTE CH57)
	6	PAL+TUNER ADJ (SMPTE CH57)	Enter	PAL TUNER auto adjustment execution (SMPTE CH57)
	7	TUNER CONTRAST A_GAIN	16	TUNER signal level adjustment
	8	TUNER CONTRAST D_GAIN	2073	TUNER signal level adjustment
	9	TUNER CONTRAST OFFSET	256	TUNER signal level adjustment
4/21				
	1	PAL ADJ	Enter	PAL adjustment
	2	SECAM ADJ	Enter	SECAM adjustment
	3	N358 ADJ	Enter	N358 adjustment
	4	PAL CONTRAST A_GAIN	14	PAL contrast adjustment
	5	PAL CONTRAST D_GAIN	2149	PAL contrast adjustment
	6	PAL CONTRAST OFFSET	255	PAL contrast adjustment
	7	SECAM CONTRAST A_GAIN	14	SECAM contrast adjustment
	8	SECAM CONTRAST D_GAIN	2123	SECAM contrast adjustment
	9	SECAM CONTRAST OFFSET	256	SECAM contrast adjustment
	10	N358 CONTRAST A_GAIN	14	N358 contrast adjustment
	11	N358 CONTRAST D_GAIN	2192	N358 contrast adjustment
	12	N358 CONTRAST OFFSET	255	N358 contrast adjustment

Page	Line	Item	Description	Remarks (adjustment detail, etc.)
5/21				
	1	HDMI CEC TEST	Enter	HDMI CEC test
	2	INSPECT USB TERM	Enter	Reading inspection of USB memory terminal
	3	HDMI EDID WRITE	Enter	HDMI EDID WRITING
	4	MONIDATA READ [TEMP/OPC]	OFF	MONITOR Temperature/OPC Acquisition tool.
	5	CAUSE RESET	Enter	Reset of standby cause
	6	SD CARD TEST	Size 1	SD CARD TEST
	7	SD CARD REC SIZE	xx	SD CARD REC SIZE
	8	RESET	OFF	SD CARD RESET
6/21				
	1	COMP15K ALL ADJ	Enter	Component 15K picture level adjustment
	2	COMP15K MAIN Y GAIN	141	Y GAIN adjustment value
	3	COMP15K MAIN CB GAIN	150	Cb GAIN adjustment value
	4	COMP15K MAIN CR GAIN	150	Cr GAIN adjustment value
	5	COMP15K Y OFFSET	64	Y OFFSET adjustment value
	6	COMP15K CB OFFSET	128	Cb OFFSET adjustment value
	7	COMP15K CR OFFSET	128	Cr OFFSET adjustment value
7/21				
	1	HDTV ADJ	Enter	HDTV video level adjustment
	2	HDTV Y GAIN	141	HDTV Y GAIN adjustment value
	3	HDTV CB GAIN	150	HDTV Cb adjustment value
	4	HDTV CR GAIN	150	HDTV Cr adjustment value
	5	HDTV Y OFFSET	64	HDTV Y OFFSET adjustment value
	6	HDTV CB OFFSET	128	HDTV Cb OFFSET adjustment value
	7	HDTV CR OFFSET	128	HDTV Cr OFFSET adjustment value
8/21				
	1	ANALOG PC ADJ	Enter	DVI ANALOG video level adjustment
	2	R OFFSET	64	R CUTOFF adjustment value
	3	G OFFSET	64	G CUTOFF adjustment value
	4	B OFFSET	64	B CUTOFF adjustment value
	5	R GAIN	44	R DRIVE adjustment value
	6	G GAIN	44	G DRIVE adjustment value
	7	B GAIN	44	B DRIVE adjustment value
9/21				
	1	SCART RGB ADJ	Enter	SCART RGB level adjustment
	2	SCART RGB ADJ (FAST SW)	ENTER	SCART RGB level adjustment with FAST SW.
	3	SCART R CUTOFF	64	SCART R CUTOFF adjustment value
	4	SCART G CUTOFF	64	SCART G CUTOFF adjustment value
	5	SCART B CUTOFF	64	SCART B CUTOFF adjustment value
	6	SCART R GAIN	44	SCART R GAIN adjustment value
	7	SCART G GAIN	44	SCART G GAIN adjustment value
	8	SCART B GAIN	44	SCART B GAIN adjustment value
10/21				
	1	VCOM ADJ	0	Common bias adjustment
11/21				
	1	R GAIN (LO)	0	R DRIVE adjustment value
	2	G GAIN (LO)	0	G DRIVE adjustment value
	3	B GAIN (LO)	0	B DRIVE adjustment value
	4	R GAIN (HI)	0	R DRIVE adjustment value
	5	G GAIN (HI)	0	G DRIVE adjustment value
	6	B GAIN (HI)	0	B DRIVE adjustment value
12/21				
	1	MONITOR TIME OUT	ON	Monitor and the main communication time-out setting
	2	MONITOR MAX TEMP	45	MONITOR MAX temperature setting
	3	MONITOR EEP READ/WRITE	WRITE	MONITOR EEPROM READ/WRITE Setting/execution
	4	MONITOR EEP ADR	0x 0	MONITOR EEPROM arbitrary addressing
	5	MONITOR EEP DATA	0x 0	MONITOR EEPROM arbitrary data specification
13/21				
	1	LCD TEST PATTERN	OFF	Pattern with built-in LCD controler display
	2	LCD TEST PATTERN 1	OFF	
	3	LCD TEST PATTERN 2	OFF	
	4	LCD TEST PATTERN 3	OFF	
	5	LCD TEST PATTERN 4	OFF	

Page	Line	Item	Description	Remarks (adjustment detail, etc.)
14/21				
	1	FRC-N Firmware Version	xxxxx	
	2	FRC-N Boot Script Version	xxxxx	
	3	FRC-N Device Version	xxxxx	
	4	TCON FPGA1 Serial Flash Version	xxxxx	
	5	TCON FPGA2 Serial Flash Version	xxxxx	
	6	TCON FPGA1 Config Rom Version	xxxxx	
	7	TCON FPGA2 Config Rom Version	xxxxx	
15/21				
	1	POWER LED BRIGHTNESS	0	
	2	MENU LED BRIGHTNESS	0	
	3	INPUT LED BRIGHTNESS	0	
	4	CH UP LED BRIGHTNESS	0	
	5	CH DOWN LED BRIGHTNESS	0	
	6	VOL UP LED BRIGHTNESS	0	
	7	VOL DOWN LED BRIGHTNESS	0	
	8	LOGO LED BRIGHTNESS	99	
	9	ICON LED BRIGHTNESS	99	
	10	ICON LED BRIGHTNESS (STANDBY)	30	
16/21				
	1	POWER KEY SENSITIVITY	0	
	2	MENU KEY SENSITIVITY	0	
	3	INPUT KEY SENSITIVITY	0	
	4	CH UP KEY SENSITIVITY	0	
	5	CH DOWN KEY SENSITIVITY	0	
	6	VOL UP KEY SENSITIVITY	0	
	7	VOL DOWN KEY SENSITIVITY	0	
17/21				
	1	KEY STRENGTH GET MODE	Enter	
	2	POWER KEY STRENGTH		
	3	MENU KEY STRENGTH		
		INPUT KEY STRENGTH		
	4	CH UP KEY STRENGTH		
	5	CH DOWN KEY STRENGTH		
	6	VOL UP KEY STRENGTH		
	7	VOL DOWN KEY STRENGTH		
18/21				
	1	READ/WRITE	READ	Read/Write
	2	SLAVE/ADDRESS	SLAVE0	Slave address
	3	REGISTER ADDRESS	0x 0	Register address
			0x 0	
	4	WRITE DATA	0x 0	Writing data
			0x 0	
	5	READ DATA	0x 0	Reading data
			0x 0	
19/21				
	1	RF AGC BG	6	RF-AGC BG adjustment execution
	2	RF AGC DK	5	RF-AGC DKG adjustment execution
	3	RF AGC I	6	RF-AGC I adjustment execution
	4	RF AGC L/L'	4	RF-AGC L/L' adjustment execution
20/21				
	1	ERROR STANDBY CAUSE 1	NO RECORD	ERROR STANDBY CAUSE
	2	ERROR STANDBY CAUSE 2	NO RECORD	
	3	ERROR STANDBY CAUSE 3	NO RECORD	
	4	ERROR STANDBY CAUSE 4	NO RECORD	
	5	ERROR STANDBY CAUSE 5	NO RECORD	
	6	STANDBY CAUSE RESET	OFF	Reset stand by cause.

Page	Line	Item	Description	Remarks (adjustment detail, etc.)
21/21				
	1	EEP SAVE	OFF	Writing setting values to EEPROM.
	2	EEP RECOVER	OFF	Reading setting values from EEPROM.
	3	MONITOR ERROR CAUSE RESET	OFF	Reset of monitor error cause
	4	MODEL NAME	LE705	MODEL NAME
	5	PANEL SIZE	40	Panel size setting. (40/46/52)
	6	SHORT CHECK MODE	Enter	Check LED Back light
	7	SHORT CHECK CURRENT	60	
	8	CURRENT SW	LOW	
	9	PRODUCT EEP ADR	0x 0	Don't touch when serving (for producer of factory)
	10	PRODUCT EEP DATA	0x 0	Don't touch when serving (for producer of factory)
	11	PRODUCT FACTORY	1	Don't touch when serving (for producer of factory)

8. Special features

1. NORMAL STANDBY CAUSE (Page 1/21)

   Display of a cause (code) of the last standby.

   The cause of the last standby is recorded in EEPROM whenever it is possible.

   Checking this code will be useful in finding a problem when you repair the troubled set.

2. EEP SAVE (Page 21/21)

   Storage of EEP adjustment value

3. EEP RECOVER (Page 21/21)

   Retrieval of EEP adjustment value from storage area.

4. MONITOR ERR CAUSE (Page 1/21)

   Display of a cause (code) of Error from sub-Microcomputer.

   The cause of Error is recorded in EEPROM whenever it is possible.

   Checking this code will be useful in finding a problem when you repair the troubled set.

   1) This displays Error code and time when the error occurred.

      The latest error is displayed on “1)”

      The error that happens ahead of “1)” is displayed on “2)”.

   2) The character depends on the way how to acquire Time Information

      T: Time is acquired from digital broadcasting
      This doesn't contain “Time offset” which is considered a time difference and Daylight-Saving Time, etc. ...

      U: Time is acquired from analog broadcasting (teletext)

      B: Accumulation time of Backlight
      In the case that Time information cannot be acquired, “B” is displayed.

   Example) In this example, it is shown that the error occurred 3 times.

   1) 16 T07/01/01 12:03 — Error code: 16 (lamp error) Time: 07/01/01 12:03
      * It is latest Error.
      * Time is acquired from digital broadcasting.
      * Time is UTC which doesn't have Time offset.

   2) 16 U01/01/01 04:07 — Error code: 16 (lamp error) Time: 07/01/01 04:07
      * It is Error that happens ahead of “1)”.
      * Time is acquired from analogue broadcasting.

   3) 16 B00000004:11 — Error code: 16 (lamp error) Accumulation time: It is displayed that 4:11 have passed after Backlight driving.
      * It is Error that happens ahead of “2)”.

   4) 00 0000000000000 — No error (“00” shows that the error is not occurred.)

9. Lamp Error detection

1. Function

   This LCD colour TV set incorporates a Lamp error detection feature that automatically turns off the power for safety under abnormal lamp or lamp circuit conditions. If by any chance anything is wrong with the lamp or lamp circuit or if the lamp error detection feature is activated for some reason, the following will result.

   1) The power is interrupted in about 500ms after it is turned on.

      (A central icon on the front of the TV flash on and off.: ON for 400ms and OFF for 1600ms.).

   2) If the above phenomenon 1) occurs 5 times, it becomes impossible to turn on the power.

      (A central icon keep flashing on/off.)

2. Measures

   1) Set the lamp error detection to OFF

      Enter the adjustment process mode, referring to “4. Entering and exiting the adjustment process mode.”

      The adjustment process mode can ignore “5 times count”, so If the above phenomenon 1) occurs 1~4 times, the lamp will go out.

      If Lamp Error detection pin (6pin of LB: P9602) is “High” by a trouble with the lamp and lamp circuit, it can boot-up by the adjustment process mode.

      Please execute **“Lamp Error detection off-mode”.**

      While holding down the “VOL (-)” and “CH (∧)” keys on the set at once, touch the power supply key on the set.

      After a central icon flash off, separate the fingers from key on the set.

      Touch the power supply key on the set again, so the power will boot-up.

      Then, you can check the operation to see if the lamp and lamp circuit are in trouble.

      If you fail boot-up, retry the procedure.

   2) Resetting the lamp error count

      After the lamp and lamp circuit are improved from a trouble, reset the lamp error count.

      (Because the power cannot be turned on, if a lamp error is detected 5 consecutive times)

      a) Enter the adjustment process mode, referring to “4. Entering and exiting the adjustment process mode.”

      b) Using the cursor (▲/▼) key, move to the cursor to [LAMP ERROR RESET], Line 8 on adjustment process mode service page 2/21.

      c) With the cursor (◄/►) keys, select the [LAMP ERROR RESET] value.

         Finally press the cursor (OK)., the count is reset.

         Check LAMP ERROR Count on adjustment process mode Page 2/21.

Table of contents of adjustment process mode Page 2/21

INDUSTRY INIT	Enter	
INDUSTRY INIT (-Publicl)	OFF	
Public MODE	OFF	
Center Acutime	···	
RESET	OFF	
Backlight Acutime	···	
RESET	OFF	
LAMP ERROR RESET	OFF	← Resetting to "0"
ADJ PARAM SET	Enter	
VIC XPOS	0	
VIC YPOS	0	
VIC SIGNAL TYPE	MAIN	
VIC READ	OFF	

10. Public Mode

1. Starting the Public Mode
   - There are two following ways to display the PUBLIC Mode setting screen.

   1) Method of needing password
      a) Turn off the power, refer to “3. Method of shuts down for Power supply”
      b) While holding down the “INPUT” and “Volume (+)” keys on the set at once, touch the power supply key on the set.
         Please separate the finger from the power supply key when boot-up is confirmed with lighting of a central icon etc.
         After a while, value of Public Mode appears on the screen.
      c) Display the Pass Word input screen.

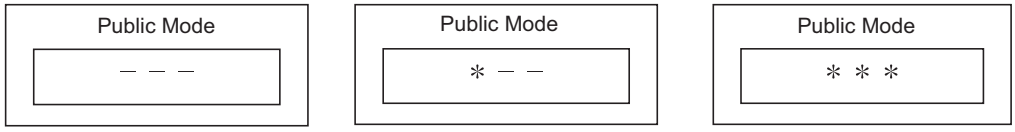

         Operation procedure
         - The initial input position is the digit at the left end.
         - For the numeric keys “0” to “9” of R/C, key input is accepted.
           Input of the other keys is prohibited.
         - Change “—” to “ * ” by inputting the numeric key at the input position, and shift the input position rightward one digit.
         - When three digits are completely input, the Pass Word is judged.
      d) Check the Pass Word by inputting three digits.
         If the Pass Word “0” “2” “7”, it shifts to the PUBLIC Mode setting screen.
         In another case, the screen is erased, and it operates in the ordinary mode.
2. Exiting the Public Mode Setting screen
   - There are two following ways to exit the Public Mode setting screen.
   1) Turn off the power.
   2) Select “Execution” in the PUBLIC_Mode to execute it.
      Activate the restart under the set content.
      Here, the START input SOURCE setting is excluded since this item is referred to only when the power is turned on.
3. Set value of the Public Mode
   - When the shipment setting is done, a set each value in Public Mode is initialized.
     (PUBLIC MODE in the process mode Setting of a flag is also initialized)
   - Separately, the shipment beginnings when all except for each set value in Public Mode is initialized are provided for a process mode.
     (INDUSTRY INIT (-Public))
   - Only when turning on the PUBLIC MODE item, each setting is effective.
   - After it decides it with EXECUTE, it AC OFF/ON it to reflect a set value.

4. Basic operation in the Public Mode

Vol (+/-) or Cursor (◀/▶)	Change or execution of the set value.
CH (∧/∨) or Cursor (▲/▼)	Movement to the selected item.
Decision (ok)	Execution (Used by the items “Execution” and “RESET”.)

Public Mode setting screen.

Public Mode	
POWER ON FIXED	[VARIABLE]
SHUT DOWN MODE	[NORMAL]
MAXIMUM VOLUME	[60]
VOLUME FIXED	[VARIABLE]
VOLUME FIXED LEVEL	[20]
RC BUTTON	[RESPOND]
PANEL BUTTON	[RESPOND]
MENU BUTTON	[RESPOND]
AV POSITION FIXED	[VARIABLE]
ON SCREEN DISPLAY	[YES]
INPUT MODE START	[NORMAL]
INPUT MODE FIXED	[VARIABLE]
LOUD SPEAKER	[ON]
RC PATH THROUGH	[OFF]
232C POWON	[DISABLE]
PUBLIC MODE	[ON]
RESET	
EXECUTE	

5. Operation after “RESET”

Select “RESET” in the PUBLIC Mode, and it operates as follows when it is executed (refer to the basic operation).

- The set contents in the PUBLIC mode are initialized.
- It does not exit the PUBLIC mode.
- If “EXCUTE” is not executed, the content that does RESET is not reflected.

6. Setting items (* Item names and selective items are expressed in English.)

1) Power ON fixed [POWER ON FIXED]

Option	“VARIABLE”, “FIXED_ALL”, “FIXED_BODYKEY” or “RCRESPOND” (loop enabled)
Default	“VARIABLE”
Function	• VARIABLE : “POWER/RECEPTION” key on TV unit or remote control is enabled. • FIXED_ALL“ : “POWER/RECEPTION” key on TV unit or remote control is disabled. • FIXED_BODYKEY : only the “MAIN POWER” key on TV unit is disabled (the remote control is enabled). • RC RESPOND : the main unit’s POWER switch toggles between ON and Standby (the same operation by the remote control).
Key disabled when set other than default	• OFF TIMER (SLEEP) (* Only when setting to FIXED_ALL)
Remarks	• When selecting to “FIXED_ALL”, function related standby factors (see below) doesn't work. and not selecting OFF TIMER (Sleep) No operation OFF No signal OFF (including the power management) * These items does not exist according to the model.

If the power button is pressed in the ordinary mode in setting to “FIXED_ALL” and “FIXED_BODYKEY”, the caution is displayed for 5 seconds.

When power button on the main unit is pressed

No Power off by power button.

When power button on R/C is pressed

No Power off by remote control.

* The OSD display is an example.

If another ODS is previously displayed, the status is reset (MENU or similar).

2) Instantaneous current shutdown setting in turning off the power [SHUT DOWN MODE]

Option	“NORMAL” or “QUICK”
Default	NORMAL
Function	• This function decides whether scanning digital tuner is enabled or disabled when the power is standby.
	NORMAL : Scanning digital tuner is enabled when the power is standby. QUICK : Scanning digital tuner is disable It is possible to put into the standby state instantaneously due to power off input, when the power is standby. Immediately, state is a complete standby.
Remarks	In selecting “QUICK”, the function does not work for the following items (selection impossible.) • ON TIMER, QUICK START, DIGITAL FIXED, etc. * These items does not exist according to the model.

3) Volume maximum level [MAXIMUM VOLUME]

Option	0~60 (loop disabled)
Default	60
Function	The volume cannot be increased more than the adjusted value (the main unit’s speaker only).
Remarks	• When setting to 59 or less, only the figure is displayed in the normal mode; the volume bar is not displayed. • The volume of the headphones is limited. or monitor output • The setting is impossible when VOLUME FIXED is set to FIXED.

4) Volume fixed [VOLUME FIXED]

Option	“VARIABLE”, “FIXED”, “ACCTRL” or “AC/RCCTRL” (loop enabled)
Default	“VARIABLE”
Function	• VARIABLE : The volume is not fixed. • FIXED : The volume is fixed to the value adjusted in the volume fixed level. • AC CTRL : The unit starts at the volume specified in the volume fixed level, when power is turned on in the case of the AC-ON only. • AC/RC CTRL : The unit starts at the volume specified in the volume fixed level, when power is turned on in any case. (AC→ON, remote control→ON, main unit's key→ON)
Exception	• In the adjustment process, the volume can be set to any level regardless of this setting.
Disabled key when setting to FIXED	• VOLUME UP/DOWN [both remote control and main unit] • MUTE
Remarks	• [MAXIMUM VOLUME] has priority to [VOLUME FIXED] * When setting to FIXED, Maximum volume is fixed. • The volume of the headphones is fixed. • When setting to “FIXED”, the volume is not displayed in operating Disabled key • In menu operation, the main unit's keys (Vol (+/-)) are enabled.

5) Volume fixed level [VOLUME FIXED LEVEL]

Option	0~60 (loop disabled)
Default	20
Function	The volume is fixed to the adjusted value (the main unit’s speaker only).
Exception	• In the adjustment process, the volume can be set to any level regardless of this setting.
Remarks	• When [VOLUME FIXED] is set to “VARIABLE”, the setting cannot be changed.

6) Remote control operation [RC BUTTON]

Option	“RESPOND”, “NORESPOND” or “LIMITED” (loop enabled)
Default	“RESPOND”
Function	The operation of the remote control’s keys is set. RESPOND : the remote control’s keys in the normal state are enabled. NO RESPOND : the remote control’s keys in the normal state are disabled. The POWER key (RECEPTION/STANDBY key) is also disabled. LIMITED : only a part of keys (CHANNEL, etc.) is enabled and other keys are disabled.
Exception	• In the adjustment process mode, inspection mode are enabled regardless of this setting. • All the keys are enabled regardless of this setting while entering the adjustment process mode, inspection mode or Public Mode setting screen.
Remarks	The enable keys when setting to “LIMITED” are depended on keys of controler for Public. It is different according to Model.

7) Main Unit Operation [PANEL BUTTON]

Option	“RESPOND” or “NORESPOND” (loop enabled)
Default	“RESPOND”
Function	• RESPOND : The main unit’s keys are enabled. • NO RESPOND : The main unit’s keys are disabled excluding the POWER key (RECEPTION/STANDBY key).
Exception	• The start operation in the adjustment process mode, inspection mode are enabled regardless of this setting. • All the keys are enabled regardless of this setting while entering the adjustment process mode, inspection mode or Public Mode setting screen. • For the models with the MENU key on the main unit, menu operation is possible regardless of the setting during the initial setting when the power is turned on for the first time.

8) Menu operation [MENU BUTTON]

Option	“RESPOND” or “NO RESPOND” (loop enabled)
Default	“RESPOND”
Function	The MENU key on the main unit and remote control is decided whether it is enabled or disabled.
Exception	• RESPOND : The menu key is enabled. • NO RESPOND : The menu key is disabled. : The start operation in the adjustment process mode, inspection mode is enabled regardless of this setting. : All the keys are enabled regardless of this setting while entering the process mode, inspection mode or Public Mode setting screen.
Disabled key excluding Menu key when setting to not default	All the direct transition keys to menu display (AUTO PRESET, MANUAL MEMORY and others) * These keys does not exist according to the model.
Remarks	When setting to “NO RESPOND” • For the models with the MENU key on the main unit, menu operation is possible regardless of the setting while the initial setting when the power is turned on for the first time

9) AV position fixed [AV POSITION FIXED]

Option	“VARIABLE” or “FIXED” (loop enabled)
Default	“VARIABLE”
Function	• VARIABLE : AV position is not fixed. • FIXED : AV position is fixed. : The image/sound adjustment items in the menu are fixed in the selected state. : When receiving “AV POSITION” of the remote control, only the actual state is displayed, and setting is not changed.
Remarks	• When receiving the sound select direct keys (AV POSITION key, OPC, DOLBY key, etc.), only the actual state is displayed; no setting is changed. * These keys does not exist according to the model. • The settings for the Public mode are retained after the personal data is initialized, each item for the AV position and image/sound adjustment are not initialized.

10)OSD display [ON SCREEN DISPLAY]

Option	“YES”, “NO” or “LIMITED” (loop enabled) “LIMITED” is looped only in case of need (destination).
Default	“YES”
Function	• YES : OSD is displayed • NO : the following OSD is not displayed. Registration, setting, adjustment menu, channel call, volume bar, and input select • LIMITED : only a part of OSD (CH call: “New Information” etc. ...) is not displayed.
Key which may be enabled (Example of the confusing key)	• It is OK in the case that simple input select occure or the original state returns soon automatically.
Disabled key when setting to not default	• When setting to “NO”, the keys which is related to visibility of the screen and sound cannot be used. STILL IMAGE, SCREEN DISPLAY, OFF TIMER, AV POSITION, BRIGHTNESS SENSOR, SCREEN SIZE SELECT, AUTO PRESET, MANUAL MEMORY, IMAGE SELECT, SOUND SELECT, LANGUAGE, Closed caution * Disabled keys dependeds on the models.
Remarks	• When setting to “NO”, ON TIMER (Watching reservation) is cleared. OFF TIMER “SLEEP” is cleared. * These items does not exist according to the model. • When setting to “NO”, These Displays (Version-up, Public mode setting screen, Pass Word input screen of Public Mode, the adjustment process mode, K mark of inspection mode) are enabled regardless of this setting.

11)Start mode [INPUT MODE START]

Option	“NORMAL” or “Input source 1 (input selection or channel)” . . . (loop enabled)
Default	“NORMAL”
Function	which kinds of input source or channel is decided when the power turning on. NORMAL : the content of the last memory is followed.
Remarks	• When setting to not Normal, ON TIMER (Watching reservation) has priority. • When setting to “NORMAL”, [INPUT MODE FIXED] is set to “VARIABLE”. and [INPUT MODE FIXED] is prohibited to select. (selection impossible.)

Example of option: “NORMAL”

“TVD (002TV)”, “INPUT1”, “INPUT2”, “INPUT3”, “HDMI1”, “HDMI2”, “HDMI3”, “HDMI4”.

12)Input fixed [INPUT MODE FIXED]

Option	“VARIABLE” “FIXED”, “ACCTRL” or “AC/RCCTRL” (loop enabled)
Default	VARIABLE
Function	VARIABLE : If [INPUT MODE START] is set to Normal, input mode is not fixed. FIXED : when “INPUT MODESTART” is active, it is impossible to switch to another channel or input source. AC CTRL : when “INPUT MODESTART” is active the unit starts at the input mode which is selected when power is turned on in the case of the AC-ON only. AC/RC CTRL : when “INPUT MODESTART” is active the unit starts at the input mode which is selected when power is turned on in any case (AC→ON, remote control→ON, main unit's key→ON)
Disabled key when setting to “FIXED”	CHANNEL (+/-), DIRECT CHANNEL buttons, FLASHBACK, INPUT SELECT, TV/VIDEO, AUTO PRESET, MANUAL MEMORY, i.LINK, DIRECTINPUTSELECT, ATV, DTV, EPG, RADIO etc. ...
Remarks	• If [INPUT MODE START] is Normal, this function cannot be set. Set to “VARIABLE” automatically. • When setting to “FIXED”, The item related to the channel setting and input selection in Menu are not displayed. ON TIMER (Watching reservation) is not active. * These items does not exist according to the model.

13)Speaker ON/OFF selection [LOUD SPEAKER]

Option	“ON” or “OFF” (loop enabled)
Default	ON
Function	ON : The sound from the speakers is output. OFF : The sound from the speakers is not output even if the headphones are not used.
Remarks	• When the VOL (+/-) key is pressed, the mute icon is displayed for 4 seconds. • For the MUTE key and sound-related keys, caution is displayed. • For the headphones, normal operation is possible.

14)Remote control path through [RC PATH THROUGH]

Option	“OFF”, “ON: TVRCE” or “ON: TVRCD” (loop enabled)
Default	OFF
Function	The item decide whether the signal received by the remotecontrol’ slight-receiving section is output to the blankpin (9pin) of RS232C. OFF : this function is not active. ON: TVRCE : this function is active, and remote control is active, too ON: TVRCD : this function is active, but remote control is not active
Exception	• In the case of “ON:TV RCD”, the start operation in the adjustment process mode, inspection mod are enabled regardless of this setting. • In the case of “ON: TV RCD”, all the keys are enabled regardless of this setting while entering the adjustment process mode, inspection mode or Public mode setting screen.
Remarks	* Remote control path through does not exist according to the model.

15)232C power ON control [232C POWON]

Option	“ENABLE” or “DISABLE” (loop enabled)
Default	DISABLE
Function	The item decide whether Power ON by the 232C command is enabled/disabled in the standby state. The same function as 232C command “RSPW”. ENABLE : POWR0001 is always enabled. DISABLE : Start-up may be impossible at POWR0001. (If the 232C command reception module is set to OFF, the command is invalid.)

16)Public mode setting [PUBLIC MODE]

Option	“OFF” or “ON” (loop enabled)
Default	OFF
Function	The item decide whether Public mode setting menu are enabled or disabled. The same item as [PUBLIC MODE] in the adjustment process menu. OFF : Public mode is not active ON : Public mode is active
Remarks	Each operation of the Public mode is impossible unless this item is set to ON.

11. Video signal adjustment procedure

The adjustment process mode menu is listed in Section 5.

Signal generator level adjustment check (Adjustment to the specified level)

- Composite signal PAL/SECAM : 0.7Vp-p ± 0.02Vp-p (Pedestal to white level)
- RGB signal : 0.7Vp-p ± 0.02Vp-p
- 15K component signal (50 Hz) : Y level : 0.7Vp-p ± 0.02Vp-p (Pedestal to white level)
  : PB, PR level : 0.7Vp-p ± 0.02Vp-p
- 33K component signal (50 Hz) : Y level : 0.7Vp-p ± 0.02Vp-p (Pedestal to white level)
  : PB, PR level : 0.7Vp-p ± 0.02Vp-p
- ANALOG RGB signal : RGB level : 0.7Vp-p ± 0.02Vp-p

11.1. Entering the adjustment process mode

Enter the adjustment process mode according to Section 4.

11.2. PAL signal adjustment

	Adjustment point	Adjustment conditions	Adjustment procedure
1	Setting	[Signal] PAL Full field colour bar composite signal [Terminal] EXT1 SCART IN	• Feed the PAL full field colour bar signal (75% colour saturation) to EXT1 SCART IN. [VIDEO input signal] 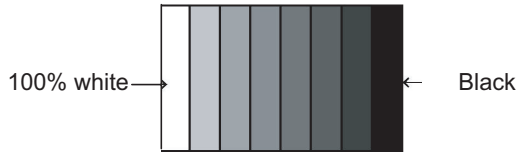
2	Auto adjustment performance	Adjustment process [PAL ADJ] page 4/21	Bring the cursor on [PAL ADJ] and press [OK]. [PAL ADJ OK] appears when finished.

* **ATTENTION:** Please execute [3. TUNER adjustment] afterwards if you adjust [2. PAL signal adjustment] after all adjustments are completed.

11.3. TUNER adjustment

	Adjustment point	Adjustment conditions	Adjustment procedure
1	Setting	[Signal] PAL split field colour Bar RF signal UV [Terminal] TUNER	• Feed the PAL Split Field colour bar signal (E-12ch) to TUNER. • Make sure the PAL colour bar pattern has the sync level of 7:3 with the picture level. Signal level: 55 dB μV ± 1dB (75Ω LOAD) [E-12CH] 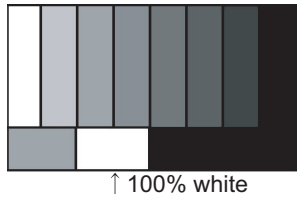
2	Auto adjustment performance	Adjustment process [TUNER ADJ] page 3/21	Bring the cursor on [TUNER ADJ] and press [OK]. [TUNER ADJ OK] appears when finished.

11.4. SECAM adjustment

	Adjustment point	Adjustment conditions	Adjustment procedure
1	Setting	[Signal] SECAM Full field colour Bar Signal [Terminal] EXT1 SCART IN	• Feed the SECAM full field colour bar signal (75% colour saturation) to EXT1 SCART IN. [VIDEO input signal] 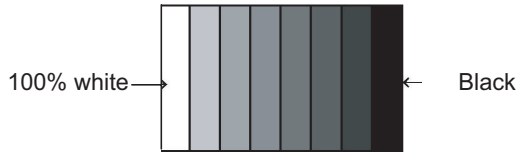
2	Auto adjustment performance	Adjustment process [SECAM ADJ] page 4/21	Bring the cursor on [SECAM ADJ] and press [OK]. [SECAM ADJ OK] appears when finished.

11.5. ADC adjustment (Component 15K)

	Adjustment point	Adjustment conditions	Adjustment procedure
1	Setting	[Signal] COMP15K, 50Hz 100% Full field colour bar Signal [Terminal] EXT3 COMPONENT IN	• Feed the COMPONENT 15K 100% full field colour bar signal (100% colour saturation) to EXT3 COMPONENT IN. 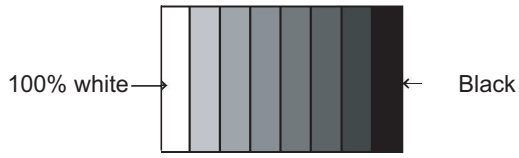
2	Auto adjustment performance	Adjustment process [COMP15k ALL ADJ] page 6/21	Bring the cursor on [COMP15k ALL ADJ] and press [OK] [COMP15k ALL ADJ] [OK] appears when finished.

11.6. ADC adjustment (Component 33K)

	Adjustment point	Adjustment conditions	Adjustment procedure
1	Setting	[Signal] COMP33K, 50Hz 100% Full field colour bar Signal [Terminal] EXT3 COMPONENT IN	• Feed the COMPONENT 33K 100% full field colour bar signal (100% colour saturation) to EXT3 COMPONENT IN. 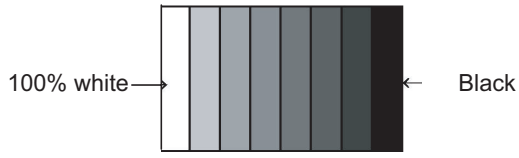
2	Auto adjustment performance	Adjustment process [HDTV ADJ] page 7/21	Bring the cursor on [HDTV ADJ] and press [OK]. [HDTV ADJ OK] appears when finished.

11.7. PC signal adjustment (ANALOG RPG)

	Adjustment point	Adjustment conditions	Adjustment procedure
1	Setting	[Signal] XGA, 60Hz 100% Full Field Colour Bar Signal [Terminal] EXT3 PC IN	• Feed the XGA 60Hz 100% full field colour bar signal (100% colour saturation) to EXT3 PC IN. 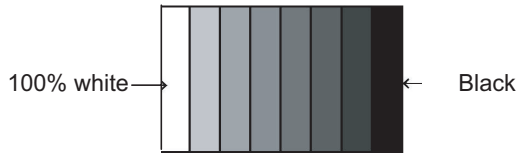
2	Auto adjustment performance	Adjustment process [ANALOG PC ADJ] menu page 8/21	Bring the cursor on [ANALOG PC ADJ] and press [OK]. [ANALOG PC ADJ OK] appears when finished.

11.8. RGB (SCART) adjustment (RGB 15K)

	Adjustment point	Adjustment conditions	Adjustment procedure
1	Setting	[Signal] RGB 15K, 50Hz 100% Full field colour bar signal [Terminal] EXT1 SCART RGB IN	• Feed the RGB 15k 50Hz 100% full field colour bar signal (100% colour saturation) to EXT1 SCART IN. 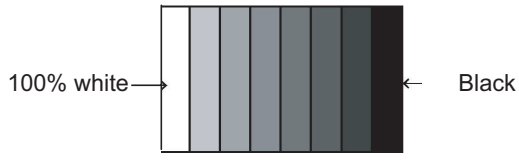
2	Auto adjustment performance	Adjustment process [SCART RGB ADJ] menu page 9/21	Bring the cursor on [SCART RGB ADJ] and press [OK]. [SCART RGB ADJ OK] appears when finished.

12. White Balance Adjustment

For white balance adjustment, adjust the offset values on pages 11/21.

[Condition of the unit for inspection] : Modulated light (+16), Colour temperature (High)
AV MODE: DYNAMIC
Active Backlight: OFF
OPC: OFF
Asing Time: Min,60 minute

[Input signal condition] : HDMI 1080i 15IRE (LO), 78IRE (HI)

[Adjustment reference device] : Minolta CA-210

[Adjustment procedure]

1) Display the current adjustment status at R/G/B_GAIN (HI). (Page 11/21 of process adjustment)

   The signal of 78IRE is input.

2) Read the value of the luminance meter. x = 0.272, y = 0.277

3) Change R_GAIN (HI)/B_GAIN (HI) (Adjustment offset value) on page 11/21 of process adjustment so that the values of the luminance meter approach x = 0.272 and y = 0.277.

   (Basically, G is not changed. If adjustment fails with R and B, change G. When G is lowered, the weaker of R or B must be fixed.)

4) Display the adjustment status of the current R/G/B_GAIN (LO).

   The signal of 15IRE is input.

   Change R_GAIN (LO)/B_GAIN (LO) (adjustment offset value) on page 11/21 of process adjustment so that the values of the luminance meter approach x = 0.272 and y = 0.277.

5) Both HI and LO are repeating the step from 1 to 4 until becoming an aim value.

   [Adjustment reference standard value]

   Adjustment spec ± 0.002 Inspection spec ± 0.004 (point LO)

   Adjustment spec ± 0.001 Inspection spec ± 0.002 (point HI)

6) After completing adjustments, set EEP SAVE (21/21) to ON in the process menu to save the white balance adjustment value.

13. Confirmation item

1. HDMI-CEC Inspection

   After repairing the CEC function, check the operation about HDMI-CEC circuit

2. CI card Inspection

   After repairing the CI function, check that the DTV signal is received in the UK setting by inserting CAM

   And check the KEY certification by inserting CAM which is prepare for CI+

3. LAN Inspection

   After repairing the LAN function, check the communication by connecting PC and LAN terminal.

14. Initialization to factory settings

CAUTION: When the factory settings have been made, all user setting data, including the channel settings, are initialized.
(The adjustments done in the adjustment process mode are not initialized.) Keep this in mind when initializing these settings.

	Adjustment point	Adjustment conditions	Adjustment procedure
1	Factory settings	ends by turning off the MAIN POWER key. (See to below caution)	[Factory setting with adjustment process mode] • Enter the adjustment process mode. • Move the cursor to [INDUSTRY INIT] on page 2/21. • Use the R/C key to select a region from [EUROPE/RUSSIA] and press the [OK] key. • “EXECUTING” display appears. • After a while, “SUCCESS” display appears, the setting is completed. When succeeding: Background colour (green) When failing: Background colour (red)
			The following items are initialized in the factory setting. 1) User settings 2) Channel data (e.g. broadcast frequencies) 3) Maker option setting 4) Password data

After adjustments, exit the adjustment process mode.
To exit the adjustment process mode, unplug the AC power cord from the outlet to forcibly turn off the power.
When the power is turned off with the remote control, unplug the AC power cord and plug it back in (wait approximately 10 seconds before plugging in the AC power cord)
Please execute the initialized in the factory setting again when you turn on the power supply after the initialized in the factory setting is set.

15. Upgrading the software

1. Turn on the AC power.
2. Insert the upgrading USB flash memory for upgrade into the service slot.
   (After a while, an external input changes into USB automatically.)
3. Use the Menu button and cursor keys (◄/►/▲/▼), CH keys (︿ / ﹀) of R/C or on the set to select Menu - Setup - Information - Software update on OSD menu.
4. The message (Insert the USB memory device contains the software update file) shows up.
   Push OK when if there is no problem.
5. After a while, if software update file is detected in the USB memory device, the following screen shows up.
   Select OK when if there is no problem.

NOTE: If there is no software update file in the USB memory device, caution shows up.
Please insert the correct file and retry software update.

NOTE: If software update file in the USB memory device doesn't mutch this model, caution shows up.
Please insert the correct file and retry software update.

NOTE: If software update file in the USB memory device is already installed, caution shows up.
Please reconfirm the software version and reinstall (if necessary).

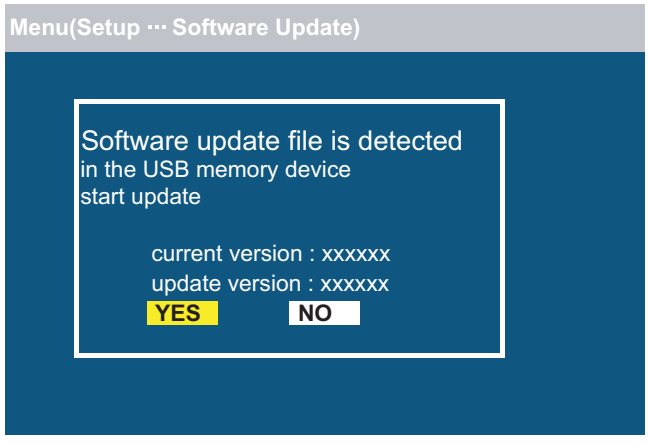

6. The caution for update showes up.
   - The picture will temporary go dark until the software update display apeeares
   - Wait several minutes and don't unplug the AC cord

   Select OK when if there is no problem.
7. Software update starts.

   Please wait for a while until the bar shows 100%

NOTE: Do not take out the USB memory device during updating.

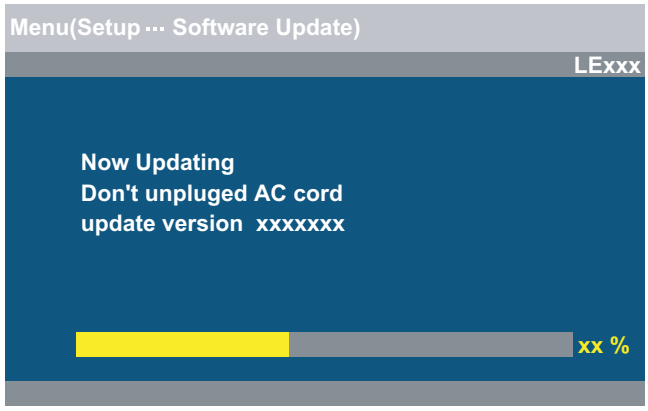

8. When all the procedures are complete, the following upgrade success screen shows up.

   The new software version can be confirmed on screen.

   After a while, Turn off power and boot-up automatically.

NOTE: TV is restarted automatically, the AC code need not be pulled out.

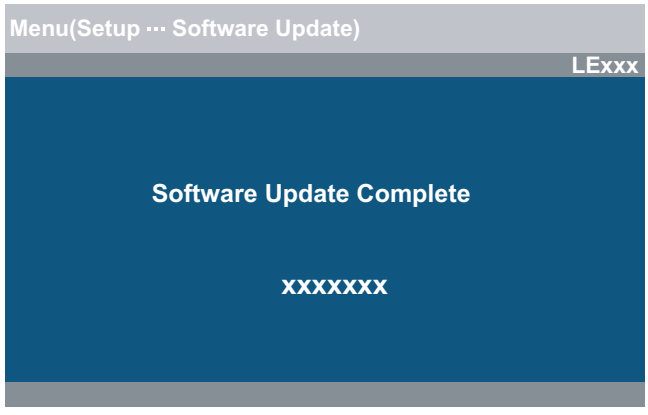

9. After boot-up, the following caution shows up.

   Select OK when if there is no problem.

   Software update is completed, please remove the USB memory device.

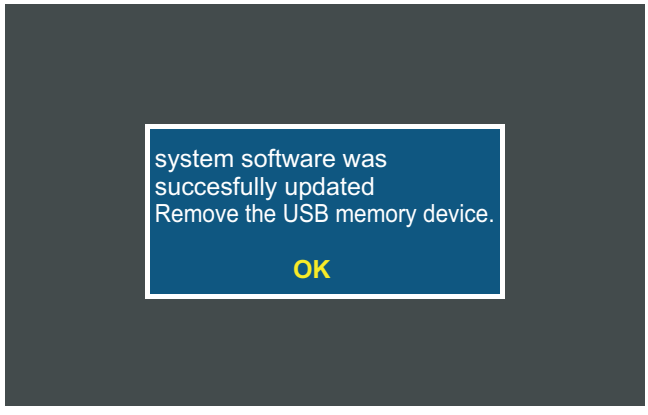

NOTE: Then get the set started and call the process adjustment screen 1/21 to check the main software version.

CHAPTER 7. TROUBLESHOOTING TABLE

[1] TROUBLESHOOTING TABLE

No power (Central Icon LED failure to light up) or No startup (Central Icon LED is flashing)

↓

Is the AC cord connector tightly connected to the set?	NO →	Reconnect the AC cord tightly and turn on the power again.

↓ YES

Are the wire harnesses and other cables properly connected in the set?	NO →	Reconnect the wire harnesses and other cables properly in the set.

↓ YES

Is there the pins (11/BU+5V) of P9601as specified?	NO →	Replace the power unit.

↓ YES

Is there the pins (10/PS_ON) of P9601 at “H”?	NO →	Check the signal line between PS_ON and IC2002.

↓ YES

Is there the pins (9/AC_DET) of P9601 at “H”?	NO →	Check the power unit, and the signal line between AC_DET and IC2002.

↓ YES

Is there the pins (1, 2, 3, 4/UR+13V) of P9601 at “H”?	NO →	Check the signal line between PS_ON and IC2002.

↓ YES

Are the DC/DC converter outputs and the output voltages along the control lines as specified? 1) BU3.3V (IC9609 etc.) 2) D3.3V (IC9605 etc.) 3) D5.6V (IC9608 etc.) 4) D5V (IC9612 etc.) 5) D+1.8V (IC9606 etc.) 6) D+1.05V (IC9604 etc.) 7) STB+3.3V (Q9604 etc.) 8) S+8V (IC9610 etc.) 9) CPU+1.2V (IC9603 etc.)	NO →	Check the DC/DC converters and the control lines. Replace defective parts as required.

The sound is not emitted from the Speaker & Woofer though the picture has come out.

↓

No sound output in all modes?

↓ YES

Is the signal output from pins (F30/AOLRCK), (F28/AOBCK) (G28/AOSDATA0) of IC3302 (Digital AV decode & Main CPU)?

NO → Check IC3302 and its peripheral circuits.

↓ YES

Is the signal sent to pins (7), (8), (9) of IC2701 (DSP)?

NO → Check the line between IC3302 and IC2701.

↓ YES

Is the signal output from pins (43/AOBCKL), (44/AMP_LRCLK), (45/AMP_DATA_LR), (46/AMP_DATA_SW), (47/AMP_MCLK) of IC2701?

NO → Check IC2701 and its peripheral circuits.

↓ YES

In the case that the sound is not emitted from the Speaker, refer to (A)
In the case that the sound is not emitted from the Woofer, refer to (B)

↓ (A)

Is the signal sent to pins (5), (6), (7), (8) of IC2703 (SP_AMP)?

NO → Check the line between IC2701 and IC2703.

↓ YES

Is the audio signal output from pins (28/OUTML), (30/OUTPL), (12/OUTPR), (14/OUTMR) of IC2703?

NO → Check IC2703 and its peripheral circuits.

↓ YES

Is the audio signal input to pins (1, 2/L-ch), (3, 4/R-ch) of IC2703?

NO → P2701 terminal and the peripheral circuit (L/C filter) are checked.

↓ YES

Check Speaker (right and left) and wire harness.

↓ (B)

Is the signal sent to pins (5), (6), (7), (8) of IC2702 (Woofer_AMP)?

NO → Check the line between IC2701 and IC2702.

↓ YES

Is the audio signal output from pins (28/OUTML), (30/OUTPL), (12/OUTPR), (14/OUTMR) of IC2702?

NO → Check IC2702 and its peripheral circuits.

↓ YES

Is the audio signal input to pins (1/SUB(+)), (2/SUB(-)) of IC2702?

NO → P2702 terminal and the peripheral circuit (L/C filter) are checked.

↓ YES

Check Woofer (right and left) and wire harness.

No sound (during the reception of TV (ANALOG) broadcasting)

↓

Does not the sound go out though the picture has come out when UHF/VHF is received?

↓

Is a SIF signal output from pin (13) of TUNER (TU1101)?

NO → Check the tuner and its peripheral circuits. Replace as required.

↓ YES

Is a SIF signal input to (AB27/S_IF) of IC3302 (Digital AV decode & Main CPU) from pin (13) of TU1101?

NO → Check the line between TU1101 and IC3302. (Q1104, etc.)

↓ YES

Refer to “No sound output in all modes.”

No sound (during the reception of TV (DIGITAL) broadcasting)

↓

Does not the sound go out though the picture has come out when DTV is received?

↓

Is IF signal output to pins (10, 11) of TU1101?

NO → Check the tuner and its peripheral circuits. Replace as required.

↓ YES

Is IF signal sent to pins (14, 15) of IC1102 (Multiplexer)?

NO → Check the line between TU1101 and IC1102.

↓ YES

Are pins (9, 10, 11) of IC1102 at H/L?

↓ L

Is IF signal sent to pins (AA29/D__IF_P, AB29/D__IF_N) of IC3302 (Digital AV decode & Main CPU)?

↓ YES

Refer to “No sound output in all modes.”

↓ H

Is IF signal sent to pins (41/INM, 42/INP) of IC1106?

NO → Check the line between IC1102 and IC1106.

↓ YES

Is signal output to pins (17/CTS_CK_60MHz, 18/CTS_SY, 19/CTS_VA, 21/CTS_D0) of IC1106?

NO → Check IC1106 and its peripheral circuits.

↓ YES

Is signal sent to pins (2, 3/CS_TS_CK, 5, 6/CS_TS_SY, 10, 11/CS_TS_VA, 14/CS_TS_D7) of IC4409 (TS SW)?

NO → Check the line between IC1106 and IC4405.

↓ YES

Is pins (2) of IC4409 at H?

NO → Check the line between IC4409 and 21pins of IC4405.

↓ YES

Is signal sent to pins (11/TS_DATA1, 12/TS_DATA2, 13/TS_DATA3, 14/TS_DATA4) of IC4405?

NO → Check the line between IC1106 and IC4405.

↓ YES

Is signal output to pins (122/TS_VALIDO, 123/TS_CLKO, 124/TS_DATAO, 124/TS_SYNCO) of IC4405?

NO → Check IC4405 and its peripheral circuits.

↓ YES

Is signal sent to pins (A30/TS_CPUIN_VAL, B30/TS_CPUIN_CLK, C30/TS_CPUIN_SYNC, C29/TS_CPUIN_D0) of IC3302 (Digital AV decode & Main CPU)?

NO → Check the line between IC4405 and IC3302.

↓ YES

Refer to “No sound output in all modes.”

No sound (during the reception of TV (DIGITAL-Satellite) broadcasting)

↓

Does not the sound go out though the picture has come out when DTV is received?

↓

Is signal input to TU1301?

NO → Check the setting of an external input device that connects with TU1301.

↓ YES

Is signal sent to pins (2, 3/CS_TS_CK, 5, 6/CS_TS_SY, 10, 11/CS_TS_VA, 14/CS_TS_D7) of IC4409 (TS SW)?

NO → Check the line between TU1301 and IC4409.
Check TU1301 and its peripheral circuits (IC1301 etc. ···).
Replace as required.

↓ YES

Is pins (2) of IC4409 at L?

NO → Check the line between IC4409 and 21pins of IC4405.

↓ YES

Is signal sent to pins (4/CS_TS_SCK, 7/CS_TS_SSY, 9/CS_TS_SVA, 12/CS_TS_SDATA) of IC4409?

NO → Check IC4409 and its peripheral circuits.

↓ YES

Is signal sent to pins (11/T0_DATA1, 12/T0_DATA2, 13/T0_DATA3, 14/T0_DATA4) of IC4405?

NO → Check the line between IC4409 and IC4405.

↓ YES

Is signal output to pins (122/TS_VALIDO, 123/TS_CLKO, 124/TS_DATAO, 124/TS_SYNCO) of IC4405?

NO → Check IC4405 and its peripheral circuits.

↓ YES

Is signal sent to pins (A30/TS_CPUIN_VAL, B30/TS_CPUIN_CLK, C30/TS_CPUIN_SYNC, C29/TS_CPUIN_D0) of IC3302 (Digital AV decode & Main CPU)?

NO → Check the line between IC4405 and IC3302.

↓ YES

Refer to “No sound output in all modes”.

No sound from external input devices (1)

↓

Does not the sound of the audio signal input to EXT1 go out?

↓

Is there a audio input signal to pins (19/AUDIO_IN_L) and (21/AUDIO_IN_R) of EXT1 (SC505)? —NO→ Check the setting of an external input device that connects with EXT1.

↓ YES

Is there a audio input signal to pins (V28/SC1_L) and (V27/SC1_R) of IC3302 (Digital AV decode & Main CPU) from SC505? —NO→ Check the line between SC505 and IC3302.

↓ YES

Refer to “No sound output in all modes.”

No sound from external input devices (2)

↓

Does not the sound of the audio signal input to EXT2 go out?

↓

Is there a audio input signal to pins (4/CVBS_IN_L) and (1/CVBS_IN_R) of EXT2 (J505)? —NO→ Check the setting of an external input device that connects with EXT2.

↓ YES

Is there a audio input signal to pins (R28/CVBS_L) and (T28/CVBS_R) of IC3302 (Digital AV decode & Main CPU) from J505? —NO→ Check IC3302 and its peripheral circuits.

↓ YES

Refer to “No sound output in all modes.”

No sound from external input devices (3)

↓

Does not the sound of the audio signal input to HDMI-2 mode go out?

↓

Check whether it is selected “Video + Audio” by the Audio setup under Menu-Setup-Option-Input terminal setting - PC input.

↓ YES

↓

Does not the sound of the audio signal input to PC/Component mode go out?

↓

Check whether it is selected “HDMI + Analog” by the Audio setup under Menu-Setup-Option-Input terminal setting - PC input.

↓ YES

Is there a audio input signal to pins (2/PC/HDMI_L) and (3/PC/HDMI_R) of J501 (PC AUDIO_IN)?

↓ NO

Check the setting of an external input device that connects with J501.

↓ YES

Is there a audio input signal to pins (V30/PC/HDMI_L) and (V29/PC/HDMI_R) of IC3302 (Digital AV decode & Main CPU) from J501? —NO→ Check the line between J501 and IC3302.

↓ YES

Refer to “No sound output in all modes.”

No sound from external input devices (4)

↓

Does not the sound of the audio signal input to HDMI1/2/3/4 go out?

↓

Please Refer to “[External input HDMI-1/2/3/4] No picture on the display (10)”.

No sound from external output device (1)

↓

No audio signal output to EXT1 terminal.

↓

Is there a audio input signal to pins (10/AUDIO_OUT_L) and (12/AUDIO_OUT_R) of EXT1 (SC505)? —YES→ Check the setting of an external input device that connects with EXT1.

↓ NO

Is SC1-MUTE [118pins of IC3302 (Digital AV decode & Main CPU)] or MUTE_A_ALL [21pin of IC2002 (UCOM)] at “H”? —YES→ Check the peripheral circuits of IC3302 and SC1-MUTE. (Q502, D529 etc.)

↓ NO

Is there a audio output signal to pins (M30/TUNER_OUT_L) and (M29/TUNER_OUT_R) of IC3302? —YES→ Check the line between IC3302 and SC505.

↓ NO

Check IC3302 and its peripheral circuits.

No sound from external output device (2)

↓

No sound from HEAD PHONE_OUTPUT/ AUDIO_OUTPUT terminal.

↓

Does not the sound of the audio signal output to Headphone mode go out?

↓

Check whether it is selected “Headphone” by Headphone/Audio out select under Menu-Setup-Option- Input terminal setting.

↓ YES

Does not the sound of the audio signal output to Audio out mode go out?

↓

Check whether it is selected “Audio out” by Headphone/Audio out select under Menu-Setup-Option-Input terminal setting.

↓ YES

Is there a audio output signal to pins (2/HP/MONI_L) and (3/HP/MONI_R) of J504 (HEAD PHONE_OUTPUT/ AUDIO_OUTPUT terminal)?

↓ YES

Check the setting of an external input device that connects with J504.

↓ NO

Is the HP_PLUG signal input to [91/HP_PLUG] of IC4405 from pin (6) of J504? —NO→ Check the line between J504 and IC4405.

↓ YES

Is HP/MONI_MUTE [AJ11 of IC3302 (Digital AV decode & Main CPU)] or MUTE_A_ALL [21pin of IC2002 (UCOM)] at “H”? —YES→ Check the peripheral circuits of IC3302 and HP-MUTE_LINE. (D527, Q506, etc.)

↓ NO

Is audio signal (HP_L/R) input to pins (M28/HP/MONI_L, M27/HP/MONI_R) of IC3302? —YES→ Check the line between IC3302 and J504.

↓ NO

Check IC3302 and its peripheral circuits.

No sound from external output device (3)

↓

No sound from DIGITAL AUDIO OUTPUT terminal.

↓

Is the audio signal output to pins (1) of sound output terminal (D520)? — YES → Check D520 and peripheral circuits.

↓ NO

Is SPDIF_MUTE signal SPDIF_MUTE [H29/IC3302] or MUTE_A_ALL [21pin of IC2002 (UCOM)] at “H”? — YES → Check the peripheral circuits of IC3302 and SPDIF_MUTE. (Q505, D530, etc.)

↓ NO

Is an audio signal input to pin (2) of IC503 from [J28/SPDIF_OUT] of IC3302 and is the logic signal input into pin (1) of IC503? — YES → Check the IC503 and peripheral circuits.

↓ NO

Check IC3302 and its peripheral circuits.

No sound from external output device (4)

↓

Does not the sound of the audio signal output to HDMI1 go out?

↓

Is the audio signal output to pins (14) of SC1503 (HDMI1 terminal)? — YES → Check SC1503 and peripheral circuits.

↓ NO

Is the audio signal output to pins (8) (10) (12) of IC1508? — YES → Check the line between SC1503 and IC1508.

↓ NO

Is the audio signal input to pins (9) (11) (13) of IC1508?
Is the audio signal output to pins (6) of IC1508?
Is the audio signal input to pins (5) of IC1508? — YES → Check SC1508 and peripheral circuits.

↓ NO

Is the audio signal output to pins (4) of IC1505? — YES → Check the line between IC1508 and IC1505.

↓ NO

Is SPDIF_MUTE signal ARC_MUTE [AK2/IC3302] or MUTE_A_ALL [21pin of IC2002 (UCOM)] at “H”? — YES → Check the peripheral circuits of IC3302 and ARC_MUTE. (Q1501, D1513, etc.)

↓ NO

Is an audio signal input to pin (2) of IC1505 from [J28/SPDIF_OUT] of IC3302 and is the logic signal input into pin (1) of IC1505? — YES → Check the IC1505 and peripheral circuits.

↓ NO

Check IC3302 and its peripheral circuits.

No picture on the display (1)

↓

The picture doesn't appear in all modes.

↓

Is the LVDS signal output from IC3302 (DIGITAL_AV_DECODER_&_MAIN_CPU_&_VIDEO PROCESSER) respectively?
LVDS0_D0N/P (D14/C14), LVDS0_D1N/P (D15/C15), LVDS0_D2N/P (D16/C16), LVDS0_CLKN/P_83MHz (D17/C17), LVDS0_D3N/P (D18/C18), LVDS0_D4N/P (D19/C19), LVDS1_D0N/P (B14/A14), LVDS1_D1N/P (B15/A15), LVDS1_D2N/P (B16/A16), LVDS1_CLKN/P_83MHz (B17/A17), LVDS1_D3N/P (B18/A18), LVDS1_D4N/P (B19/A19)

↓ NO → Check IC3302 and its peripheral control circuits. (IC2002, IC3501, IC3502, X3302, etc.)

↓ YES

Is the above-mentioned LVDS signal output to connector P2601? → NO → Check the line between IC3302 and P2601.

↓ YES

Similarly, is LCD controler's control signal normal? → NO → Please check each control signal of DET_POW (DET_PNL12V), PE. (PNL_EN)

↓ YES

PANEL_UNIT:
Is the LVDS signal input to connector LW of the panel module? → NO → NO Wire harness (LW) is checked.

↓ YES

Check the panel module.

No picture on the display (2)

↓

Does not the picture come out when VHF/UHF is received?

↓

Is the video signal (TUNER_CVBS) output from pin (16) of TUNER (TU1101)? → NO → Check the tuner and its peripheral circuits. Replace as required.

↓ YES

Is the video signal (TUNER_CVBS) sent to pin (AD29/ TU_CVBS) of IC3302 (Digital AV decode & Main CPU)? → NO → Check the line between TU1101 and IC3302. (Q1106, etc.)

↓ YES

Refer to “The picture doesn't appear in all modes.”

No picture on the display (3)

↓

Does not the picture come out when DTV is received?

↓

Refer to “No sound (during the reception of TV (DIGITAL) broadcasting).”

No picture on the display (4)

↓

Does not the picture come out when DTV (Satellite) is received?

↓

Refer to “No sound (during the reception of TV (DIGITAL-Satellite) broadcasting)”.

[External input EXT1] No picture on the display (5)

↓

Does not the picture of the CVBS signal input to EXT1 go out?

↓

Is CVBS signal sent to pin (14) of EXT1 (SC505)? — NO → Check the setting of an external input device that connects with EXT1.

↓ YES

Is CVBS signal from EXT1 (SC505) sent to pin (AG29/SC1_CVBS_Y) of IC3302 (Digital AV decode & Main CPU)? — NO → Check the line between SC505 and IC3302.

↓ YES

Refer to “The picture doesn't appear in all modes.”

[External input EXT1] No picture on the display (6)

↓

Does not the picture of the Y/C video signal input to EXT1 go out?

↓

Is Y/C video signal sent to pins (14)/Y and (4)/C of EXT1 (SC505)? — NO → Check the setting of an external input device that connects with EXT1.

↓ YES

Is Y/C signal from EXT1 (SC505) sent to pins (AG29/SC1_CVBS_Y) and (AG28/SC1_C1) of IC3302 (Digital AV decode & Main CPU)? — NO → Check the line between SC505 and IC3302.

↓ YES

Refer to “The picture doesn’t appear in all modes.”

[External input EXT1] No picture on the display (7)

↓

Does not the picture of the R/G/B signal input to EXT1 go out?

↓

Is RGB1 signal sent to pins (4)/RGB_IN_RED/C, (6)/RGB_IN_GREEN and (8)/RGB_IN_BLUE of EXT1 (SC505)? — NO → Check the setting of an external input device that connects with EXT1.

↓ YES

Is RGB1 signal from EXT1 (SC505) sent to pins (AH22/RED1), (AJ22/GREEN_1) and (AJ21/BLUE_1) of IC3302 (Digital AV decode & Main CPU)? — NO → Check the line between SC505 and IC3302.

↓ YES

Refer to “The picture doesn’t appear in all modes.”

[External input EXT2] No picture on the display (8)

↓

Does not the picture of the CVBS signal input to EXT2 go out?

↓

Is a CVBS signal input to pin (3) of EXT8 (J505)?

NO → Check the setting of an external input device that connects with EXT2.

↓ YES

Is CVBS signal sent to pin (AE29/CVBS_IN) of IC3302?

NO → Check the line between J505 and IC3302.

↓ YES

Refer to “The picture doesn't appear in all modes.”

[External input EXT3] No picture on the display (9)

↓

Does not the picture of the component video signal input to EXT3 (15pin-D-SUB terminal) go out?

↓

Is it selected “Component” by the Audio setup under Menu-Setup-Option-Input terminal setting - Input select?

NO → Set the “Component”.

↓ YES

Is a COMPONENT video signal input to pins (1)/PC_R_COM, (2)/PC_G_COM, (3)/PC_B_COM of EXT3 (SC501)?

NO → Check the setting of an external input device that connects with EXT3.

↓ YES

Is COMPONENT signal sent to pins (AJ17/PC_R_CM), (AJ16/PC_G_CM) and (AJ15/PC_B_CM) of IC3302?

NO → Check the line between SC501 and IC3302.

↓ YES

Refer to “The picture doesn't appear in all modes.”

[External input EXT3] No picture on the display (10)

↓

Does not the picture of the DVI (ANALOG) video signal input to EXT3 (15pin-D-SUB terminal) go out?

↓

Is it selected “PC (RGB)” by the Audio setup under Menu-Setup-Option-Input terminal setting - Input select?

NO → Set the “PC (RGB)”.

↓ YES

Are the video signal and the synchronized signal input from pin (1, 2, 3)/(PC_R, G, B), (14 and 13)/(V, H.Sync) of EXT4 (SC501)?

NO → Check the connection and setup with the external DVI devices.

↓ YES

Are the video signal and the synchronized signal input from pins (AK17/PC__R) (AK16/PC__G) (AH15/PC__B) and (AK14/PC_HSYNC) (AJ14/PC_VSYNC) of IC3302 (Digital AV decode & Main CPU)?

NO → Check the line between SC501 and IC3302.

↓ YES

Refer to “The picture doesn't appear in all modes.”

[External input HDMI-1/2/3/4] No picture on the display (11)

↓

Does not the picture/sound of the HDMI signal input to HDMI-1/2/3/4 go out?

↓

Is the Hot plug detection function output from pin (19) of the HDMI-1 (SC1503) normal?	NO →	Check the line between SC1503 and pin (45) of IC1504 (HDMI-SW).
Is the Hot plug detection function output from pin (19) of the HDMI-2 (SC1502) normal?	NO →	Check the line between SC1502 and pin (41) of IC1504 (HDMI-SW).
Is the Hot plug detection function output from pin (19) of the HDMI-3 (SC1501) normal?	NO →	Check the line between SC1501 and pin (35) of IC1504 (HDMI-SW).
Is the Hot plug detection function output from pin (19) of the HDMI-4 (SC1505) normal?	NO →	Check the line between SC1505 and pin (31) of IC1504 (HDMI-SW).

↓ NO

Check the setting of an external input device that connects with HDMI-1/2/3/4.

↓ YES

Is EDID data pins (44/HDMI1_SCL), (43/HDMI1_SDA) of IC1504 accessed, and is it read from pins (15, 16) of a HDMI-1 (SC1503)?	NO →	Is access possible in the exchange of IC1504?
Is EDID data pins (40/HDMI2_SCL), (39/HDMI2_SDA) of IC1504 accessed, and is it read from pins (15, 16) of a HDMI-2 (SC1502)?		↓ NO
Is EDID data pins (34/HDMI3_SCL), (33/HDMI3_SDA) of IC1504 accessed, and is it read from pins (15, 16) of a HDMI-3 (SC1501)?		Check the peripheral circuit of SC1502/1503/1505/1501and IC1504.
Is EDID data pins (30/HDMI3_SCL), (29/HDMI3_SDA) of IC1504 accessed, and is it read from pins (15, 16) of a HDMI-4 (SC1505)?		

↓ YES

Is TMDS signal input into pins (20, 19/HDMI1_CLKP/N), (22,21/HDMI1_D0P/N), (24, 23/HDMI1_D1P/N), (26, 25/HDMI1_D2P/N) of IC1504 from HDMI-1 (SC1503)?	NO →	Check the line between HDMI-1 (SC1503) and IC1504.
Is TMDS signal input into pins (12, 11/HDMI2_CLKP/N), (14, 13/HDMI2_D0P/N), (16, 15/HDMI2_D1P/N), (18, 17/HDMI2_D2P/N) of IC1504 from HDMI-2 (SC1502)?	NO →	Check the line between HDMI-2 (SC1502) and IC1504.
Is TMDS signal input into pins (2, 1/HDMI3_CLKP/N), (4, 3/HDMI3_D0P/N), (6, 5/HDMI3_D1P/N), (8, 7/HDMI3_D2P/N) of IC1504 from HDMI-3 (SC1501)?	NO →	Check the line between HDMI-3 (SC1501) and IC1504.
Is TMDS signal input into pins (66, 65/HDMI4_CLKP/N), (68, 67/HDMI4_D0P/N), (70, 69/HDMI4_D1P/N), (72, 71/HDMI4_D2P/N) of IC1504 from HDMI-4 (SC1505)?	NO →	Check the line between HDMI-4 (SC1505) and IC1504.

↓ YES

Are TMDS_Rx and the I2C_SINK signal output from IC1504 respectively? Pins (62, 63/SW_TMDS_CLKP/N), (60, 61/SW_TMDS_D0P/N), (58, 59/SW_TMDS_D1P), (56, 57/SW_TMDS_D2P)	NO →	Check the IC1504 and peripheral circuits.

↓ YES

Is the TMDS_Rx/ I2C_SINK signal input to IC3302 (Digital AV decode & Main CPU)? Pins (AK6, AJ6/SW_TMDS_CLKP/N), (AK7, AJ7/SW_TMDS_D0P/N), (AK8, AJ8/SW_TMDS_D1P/N), (AK9, AJ9/SW_TMDS_D2P/N) from IC1504	NO →	Check the line between IC1504 and IC3302.

↓ YES

Refer to “The picture doesn't appear in all modes.” or “No sound output in all modes.”

<During external connection> No picture on the monitor

↓

No picture appears on EXT1connected monitor during the ATV/DTV reception.

↓

Is CVBS signal output into pin (2) of EXT1 (SC505)? — YES → Check the setting of an external input device that connects with EXT1.

↓ NO

Is CVBS signal output to pin (2) of IC504? — YES → Check the line between SC505 and IC504.

↓ NO

Is TU_OUT_CVBS_MUTE [pin (1) of IC504] at “H”? — YES → Check the peripheral circuits of IC3302.

↓ NO

Is CVBS signal input to pin (6) of IC504? — YES → Check the IC504 and their peripheral circuits.

↓ NO

Is CVBS signal output to pin (A27) of IC3302 (Digital AV decode & Main CPU)? — YES → Check the line between IC504 and IC3302.

↓ NO

In the case that No picture appears on EXT1connected monitor during the ATV reception., refer to (A)
In the case that No picture appears on EXT1connected monitor during the DTV reception., refer to (B)

↓ (A) Refer to “No picture on the display (2)”

↓ (B) Refer to “No picture on the display (3)”

[External input Network] No picture on the display

↓

Does not the signal input to Network go out?

↓

Does the signal in/output to pins (1), (2), (3), (4) of LAN-jack (J9501)? — NO → Check the interface device and peripheral circuits. (power-LED of hub, LINK-LED of hub)

↓ YES

Does the signal in/out to pins (12, 11/TX+-), (10, 9/RX+-) of IC9501? — NO → Check the line between J9501 and IC9501.

↓ YES

Does the signal in/output to pins [18, 19, 47, 29, 41, 27, 23, 22/ONDA6~13], [21, 20, 35, 36, 38, 39, 34/ONDD8~14], [28, 33/N_ONDCE0, N_ONDCE1] of LAN-jack (J9501)? — NO → Check IC9501 and its peripheral circuits.

↓ YES

Does the signal in/output to pins [A8, B8, C9, C8, A7, F10, A4, B4/ONDA6~13], [D13, F13, D11, E11, F12, E12, E13/ONDD8~14], [C6, B3/N_ONDCE0, N_ONDCE1] of IC3302 (Digital AV decode & Main CPU)? — NO → Check the line between X9501 and IC9501.
Check the crystal X9501. (SCA219WJ)

↓ YES

Check IC9501 and its peripheral circuits.

No light (Back Light doesn't light)

Is the AC cord connector tightly connected to the set?
- NO → Reconnect the AC cord tightly and turn on the power again.
- YES ↓

Are the wire harnesses and other cables properly connected in the set?
- NO → Reconnect the wire harnesses and other cables properly in the set.
- YES ↓

Does Power starts up (central Icon LED lights up)?
- NO → Refer to “No power (central Icon LED failure to light up) or no startup (central Icon LED failure is flashing)”
- YES ↓

Is there the pins (12/PNL_POW) of P9601 at “H”?
- NO → Check the power unit, and the signal line between PNL_POW and IC3302.
- YES ↓

Is there the pins (8/STB) of P9602 at “H”?
- NO → Check the power unit, and the signal line between STB and IC2002.
- YES ↓

Replace the power unit.

LCD Panel failure (1)

- Does a single or several vertical stripes appear on the LCD screen?
- Does a single or several horizontal stripes appear on the LCD screen?
- Do luminescent or black dots appear on the screen?
- Is the on-screen image rippling or distorted?
- Is there any portion which some screens were darkish or became whitish?
- Does all LED of one line are not lighting?

Replace the LCD panel or the power unit.

LCD Panel failure (2)

- The backlight functions. Does not the image come out in the LCD screen (screen black)?
- Does the entire LCD screen look whitish all over?
- Does the QS drive function?
- Are the data bit drop-out? (No solution even when turning on and off the QS drive)
- Is the gamma correction as specified?

Replace the LCD_CONT_UNIT.

[2] LED flashing specification at the time of the error

Display method

- Refer to Table 1.
- LED that can be used is only one of the central icons.

  This expresses the error situation by combining blinking at low speed and blinking at high speed.
- For this model, the blinking pattern displayed first is only a low-speed blinking.

  This expresses **a rough content of the error.**
- For this model, details are displayed by high-speed blinking by pushing remote control MENU key.

  This expresses **details of the error.**

  Details are distinguished by the blinking frequency.
- It doesn't return to the outline display again (blink at low speed) by pushing the MENU key (The toggle is not done).

  Please confirm “MONITOR ERR CAUSE” of the adjustment Process mode (1/21), when the error doesn't reproduce by having returned from the error.
- The process of the upgrade is expressed by the brightness of point LED that smoothness changes.
- The upgrade completion is expressed by the LED brightness that changes in a staircase pattern.

LED flashing method

<Examination for a rough content of the error>

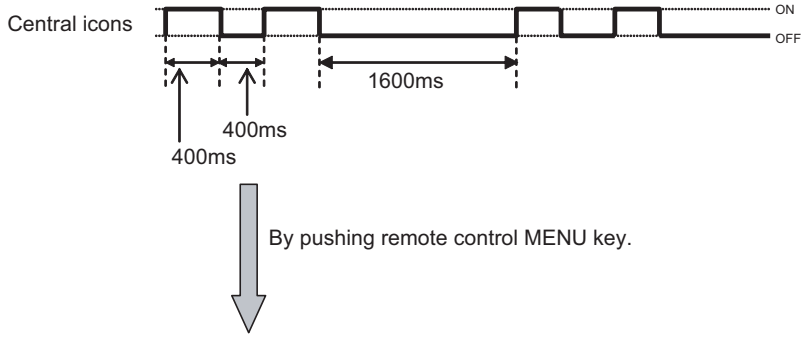

<Examination for details of the error>

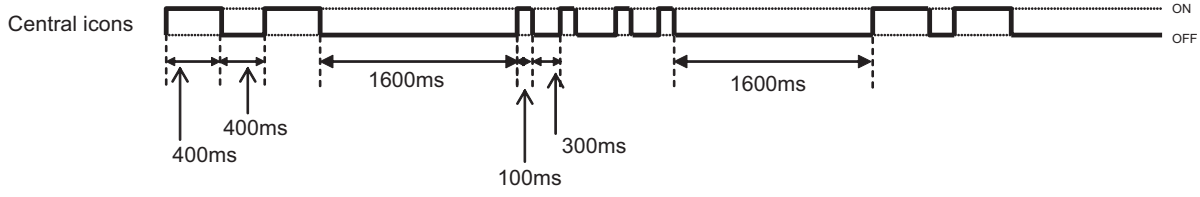

<Upgrade executing>

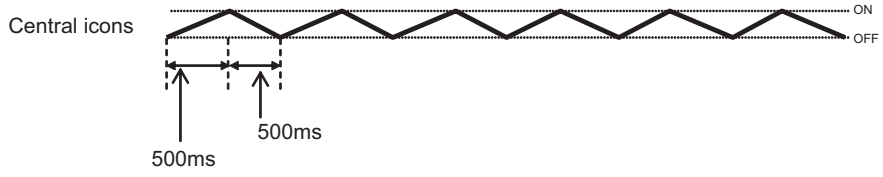

<Upgrade completion>

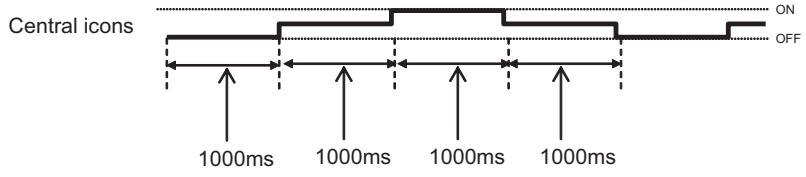

Table 1. Concrete flashing pattern

Item	Expression for a rough content		Expression for Details		Cause
	low-speed blinking	high-speed blinking	low-speed blinking	high-speed blinking	
Lamp system failure	Flashes once	—	Flashes once	Flashes once	Lamp error
Power PWB failure (Power failure, etc.)	Flashes twice	—	Flashes twice	Flashes once	Power Error 1 AC_DET error (*2)
				Flashes twice	Power Error 2 UR+13.5V error (*2)
				Flashes 3 times	Power Error 3 D3.3V error (*2)
				Flashes 5 times	Panel power supply error
Main PWB failure (Communication failure, etc.)	Flashes 3 times	—	Flashes 3 times	Flashes once	Initial communication error
				Flashes twice	Start-up confirmation communication error
				Flashes 3 times	Regular communication error
				Flashes 5 times	Other communication error
Others	Flashes 4 times	—	Flashes 4 times	Flashes once	Temperature error
				Flashes twice	Sync error
				Flashes 3 times	Notification from the main microprocessor (*3)
Upgrade executing	smoothness changes.	—	—	—	Version upgrading
Upgrade completion	a staircase pattern.	—	—	—	Version upgrade succeeded
Upgrade failed	—	Flashing (Continuous)	—	—	Version upgrade failed
ROM data failure	—	Flashing (Continuous)	—	—	Start-up after failing version upgrade (*4)

*2: It depends on the system. The power supply error suitable for the product is defined.

*3: For details, refer to ERROR STANDBY CAUSE on the adjustment process screen.

*4: If the boot section is abnormal, there is no flashing (flashing disabled).

MONITOR ERR STBY table

Outline: Communication/Power failure detected by the monitor microprocessor (IC2002) is stored on EEPROM, states can be confirmed in the adjustment process mode.

Location: Page 1/21 of the adjustment process mode: MONITOR ERR CAUSE “0” if there is no error. It is cleared to 0 on the page (2/21) of the adjustment process mode.

Display	Error description	
02	Start-up communication error 2	Initial communication from the main CPU is not received.
03	Start-up communication error 3	Only the initial communication is received.
04	Start-up communication error 4	Until panel information request reception
05	Start-up communication error 5	Until initialization completion reception
06	Start-up communication error 6	Until version notification transmission
07	Start-up communication error 7	Until start-up information notification transmission
08	Start-up communication error 8	Until start-up information response reception
09	Start-up communication error 9	Until time-out setting reception
0A	Communication error A	REQ time-out
0B	Communication error B	Restart time-out during the beginning of time acquisition start-up
0C	Communication error C	Ending sequence time-out
0D	Communication error D	Preset start-up time-out during completion
0E	Communication error E	Download start-up time-out
0F	Communication error F	Time acquisition time-out
11	Communication error H	Regular communication time-out
16	Panel-related error	Lamp failure
1A	Other error 2	Monitor temperature failure
1D	Power supply error 1	PS_ON (AC_DET) failure
1E	Power supply error 2	D_POW (DET_13V) failure
1F	Power supply error 3	D_POW (DET_D3V3) failure
21	Power supply error 5	Panel power failure
23	Other error 3	Error standby request from the main CPU

LED flashing timing chart at the time of the error

1) Low-speed blinking

Error type	Expression of Central Icon LED	Note: Pins are monitor microprocessor pins (IC2002).
Lamp failure low-speed blinking Flashes once	H: ON L: OFF	Refer to “Lamp failure details”. LOW/High blinking by pressing the [MENU] key on the remote control.
Power failure low-speed blinking Flashes twice	H: ON L: OFF	Refer to “Power failure details”. LOW/High blinking by pressing the [MENU] key on the remote control.
Communication failure with main CPU low-speed blinking Flashes 3 times	H: ON L: OFF	Refer to “Communication failure details”. LOW/High blinking by pressing the [MENU] key on the remote control. Communication line failure or main CPU communication failure.
Others low-speed blinking Flashes 4 times	H: ON L: OFF	Refer to “Other failure details”. LOW/High blinking by pressing the [MENU] key on the remote control.

2) Lamp failure details (Low-speed blinking: Flashes once + High-speed blinking)

Error type	Expression of Central Icon LED	Note: Pins are monitor microprocessor pins unless otherwise specified (IC2002).
Lamp failure Flashes once (High speed)	H: ON L: OFF	ERR_PNL (40pin): Abnormal H. Confirmed after 8 consecutive detections at 64ms intervals (detected only when the backlight is on). NOTE: After 5 detection counts, the lamp cannot be activated except in the monitoring process. To confirm the problem, “Lamp Error detection off-mode” is prepared. This mode compulsorily starts the set disregarding the count. Please refer to [ADJUSTMENT PROCEDURE - 7. Lamp Error detection]

3) Power failure details (Low-speed blinking: Flashes twice + High-speed blinking)

Error type	Expression of Central Icon LED	Note: Pins are monitor microprocessor pins unless otherwise specified (IC2002).
PS_ON AC_DET failure Flashes once (High speed)	H: ON L: OFF	AC_DET (72pin: Abnormal (L). If error is detected during start-up or operation, the power is turned on again by interrupt handling (instantaneous blackout processing).
SM_POW Main 13V failure Flashes twice (High speed)	H: ON L: OFF	DET_13V (38pin): Abnormal (L). Main 13V is not applied. If error is detected during start-up or operation, the power is turned on again by polling.
D_POW Digital 3.3V failure Flashes 3 times (High speed)	H: ON L: OFF	DET_D3V3 (36pin): abnormal (L). Digital 3.3V is not applied. If error is detected during start-up or operation, the power is turned on again by polling.
PANEL_POW Panel 12V failure Flashes 5 times (High speed)	H: ON L: OFF	DET_PNL12V (35pin): abnormal (L). DET_PNL12V is not applied. Detection starts after receiving command from Panel Power ON. The power is turned off by polling.

4) Communication failure details (Low-speed blinking: Flashes 3 times + High-speed blinking)

Error type	Expression of Central Icon LED	Note: Basically, debug print logs are analyzed or communication logs are analyzed by a bus monitor.
Initial communication reception failure Flashes once (High speed)	H: ON L: OFF	Initial communication from the main CPU is not received. (Request for the monitor model No. is not received.) → Communication line failure or main CPU start-up failure
Start-up confirmation reception failure Flashes twice (High speed)	H: ON L: OFF	Start-up reason confirmation from the main CPU cannot be received. (Startup communication until start-up reason notification command is not received.) → Main CPU start-up failure or monitor microprocessor reception failure
Regular communication failure Flashes 3 times (High speed)	H: ON L: OFF	Regular communication that is performed at 1 second intervals in the normal operation is interrupted. → Main CPU operation failure or monitor microprocessor reception failure
Other communication failure Flashes 5 times (High speed)	H: ON L: OFF	When a request (PM_REQ=H) is sent from the main microprocessor, the request command is not output from the main CPU, etc. → Main CPU operation failure or monitor microprocessor reception failure

5) Other failure details (Low-speed blinking: Flashes 4 times + High-speed blinking)

Error type	Expression of Central Icon LED	Note: Pins are monitor microprocessor pins unless otherwise specified (IC2002).
Monitor temperature failure Flashes once (High speed)	H: ON L: OFF	If the panel temperature is 60°C or more for 15s or more in a row, CAUTION appears on the OSD (flashes in red in the lower right screen). If the panel temperature is 60°C or more for 25s or more in a row, error standby is activated. (MONITOR MAX TEMP on page 13/21 of the adjustment process: Change AD value for temperature failure): Thermistor
Main failure Flashes 3 times (High speed)	H: ON L: OFF	Main microprocessor detection error (CPU temperature error, etc.) Details are displayed on page 1/21 of the adjustment process for the main microprocessor.

CHAPTER 8. MAJOR IC INFORMATIONS

[1] MAJOR IC INFORMATIONS

REF NO	Name	Part Code	Description
[MAIN UNIT]			
IC8401	RH-iXC147WJQZQ	Flash	This IC is 512MB NAND flash memory. This IC stores the software data that processes the system of TV such as the graphic processing, the LCD controls, and backlights etc.
IC3302	RH-iXC951WJN1Q	Main CPU	This IC is Video Processor & MAIN CPU. In this IC, the decode processing and the video signal processing are done. Moreover, OSD is generated here and added to a picture signal.
IC2002	RH-iXC786WJQZQ for service (RH-iXC786WJNYQ)	UCOM	The monitor microprocessor is intended to communicate with the main CPU and to operate the system. It also controls power of the entire system.
IC3501/3502	RH-iXC754WJQZQ	DDR	This IC is 1GB DDR2 SDRAM. This IC operates as a memory of IC3302 (Video Processor). ***
IC501	VHi24LC21AT-1Y for service (RH-iXD108WJQZS)	1K bit E2PROM	This IC is a 1Kbit-2-wire (I2C bus type) serial EEPROM that can be programmed electrically. The EEPROM chip stores the EDID data of PC input. This data is controlled through I2C signals.
IC8455	VHiR24064AS-1Y	64K bit E2PROM	The BR24S64W is a 64Kbit-2-wire (I2C bus type) serial EEPROM that can be programmed electrically. This IC stores the menu data and the adjustment value data of adjustment process mode etc. The data is given out by commands from the main microprocessor.
IC506	VHiM3221EIP-1Y	RS232C-DRIVER	The MAX3221E is a single driver, single receiver RS-232 solution operating from a single Vcc supply. The RS-232 pins provide IEC G1000-4-2 ESD Protection. The device meets the requirements of TIA/EIA-232-F and provides the electrical interface between an asynchronous communication controler and the serial-port connector. The charge pump and four small external capacitors allow operation from a single 3V to 5.5V supply.
IC4405	VHiMT8295AE-1Q	CI controler	This is a control IC for PCMCIA cards. This controls information on IC cards inserted into the PCMCIA card slot (SC4401) or information on software version upgrade cards saved on flash memories to transfer the data to CPUs and memories.
IC2004	VHiR24002AS-1Y	2K bit E2PROM	This is a 2Kbit-2-wire (I2C bus type) serial EEPROM that can be programmed electrically. This IC stores the menu data and the adjustment value data of adjustment process mode etc. The data is given out by commands from the main microprocessor.
IC1504	VHiSii9287+-1Q	HDMI_Port _Processor	The SiI9287 HDMI port processor is the second generation of HDMI devices that support revision 1.3 of the HDMI specification. The main feature is as follows. 1) 4-input, 1-output HDMI port processor. 2) Integrated TMDS receiver and transmitter cores capable of receiving and transmitting at 2.25Gbps. 3) Supports video resolutions up to 1080p, 60Hz, 12bit or 720p/1080i, 120Hz,12bit. 4) Receiver fully comply with DVI1.0, HDCP1.1 and HDMI1.3 specifications.
IC1106	VHiSTV0297E-1Q	COFDM	The STV0297E's demodulator is a complete QAM (quadrature amplitude modulation) demodulation and FEC (forward error correction) solution that performs IF to transport stream block processing of QAM signals. It is intended for the digital transmission of compressed television, sound, and data services over cable.
IC9501	VHiKSZ8041T-1Y	Ethernet Bus Interface	This IC is a single supply 10Base-T/100Base-TX Physical Layer Transceiver, which provides MII/RMII/SMII interfaces to transmit and receive data.
IC2701	VHiYSS951VZ-1Y	Sound processor	This IC is the Sound processing LSI with built-in two DSP (MDSP/SDSP) and FM (frequency modulation) oscillators. This IC process sound signal and sent it to AMP for Speaker and Woofer
IC2702/2703	VHiYDA164QZ-1Y	Audio-AMP	This IC is digital audio power amplifier with digital audio interface. The power-supply voltage is corresponded to A.8V~18V and the maximum output is 20Wx2ch.
IC1301	RH-iXC563WJQZY	LNB supply and control	It is IC for amplifying the feeble electric wave sent from satellite broadcasting on the level which can treat a decoder, and changing and processing signal.

— MEMO —

CHAPTER 9. OVERALL WIRING/BLOCK DIAGRAM

[1] OVERALL WIRING DIAGRAM

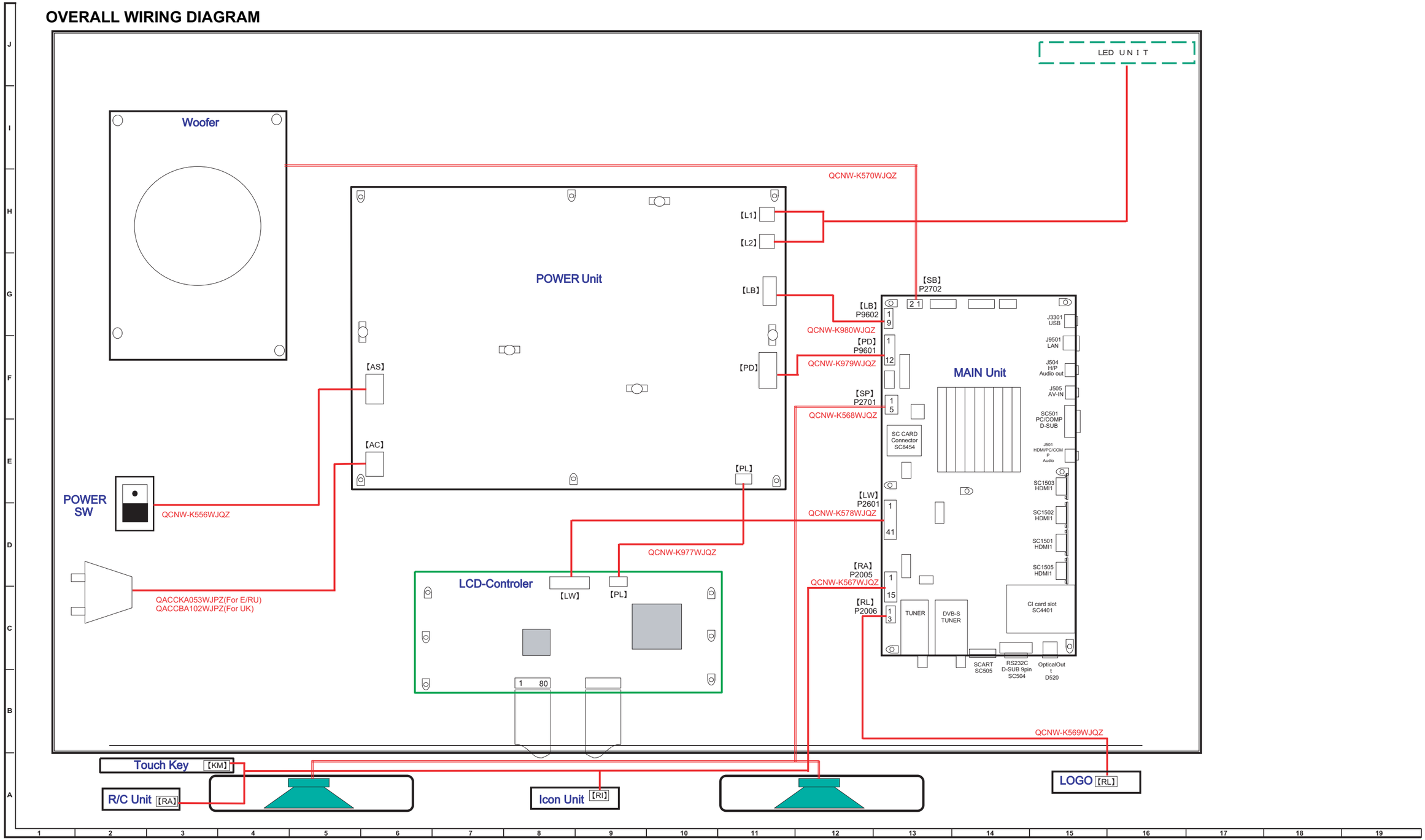

[2] SYSTEM BLOCK DIAGRAM

SYSTEM BLOCK DIAGRAM

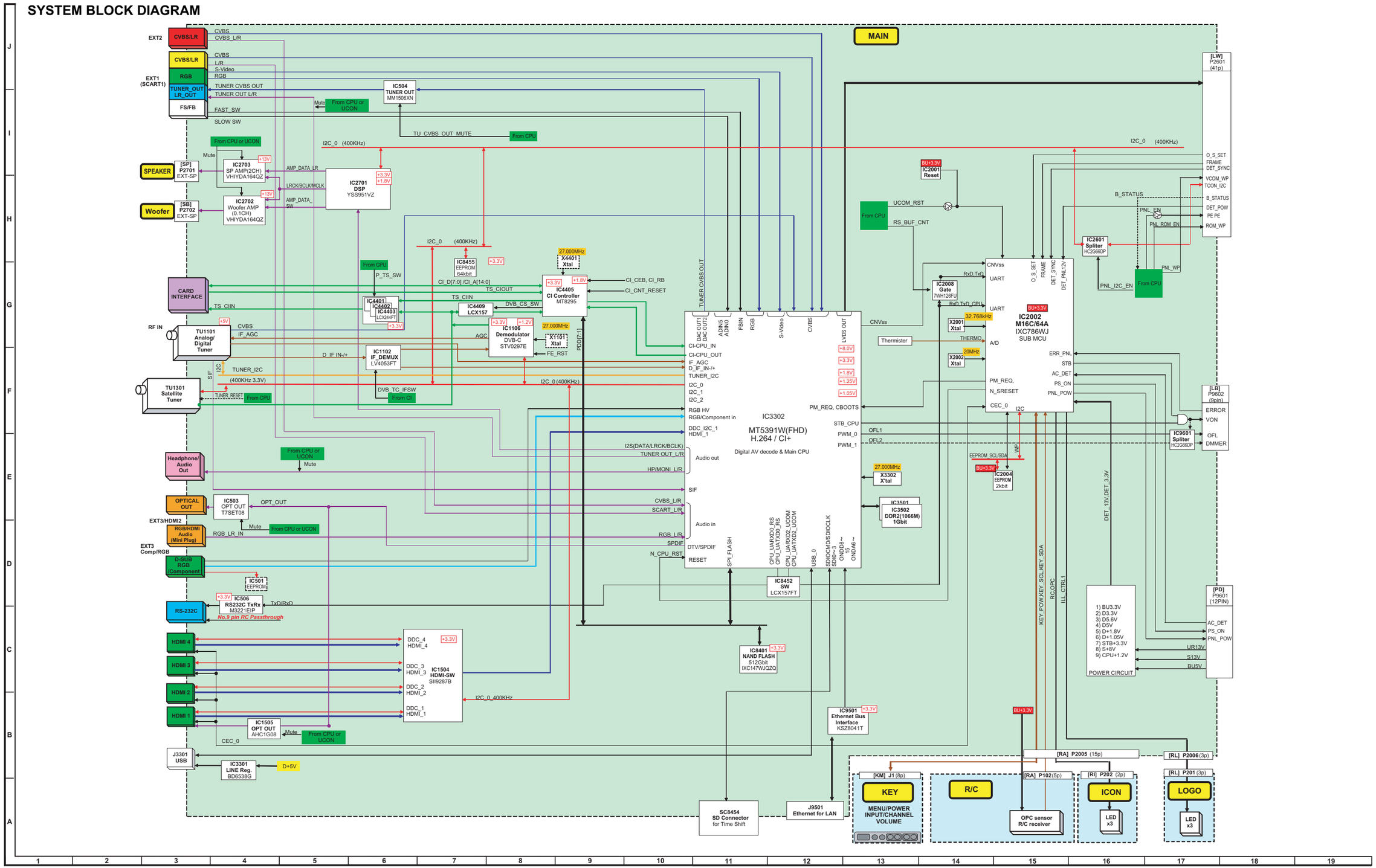

SHARP PARTS GUIDE

No. S90L460LE822E

LCD COLOUR TELEVISION

MODELS LC-60LE822E LC-60LE822ERU

CONTENTS

[1] PRINTED WIRING BOARD ASSEMBLIES

[2] LCD PANEL MODULE

[3] CABINET PARTS

[4] SUPPLIED ACCESSORIES

[5] PACKING PARTS (NOT REPLACEMENT ITEM)

[6] SERVICE JIGS (USE FOR SERVICING)

Parts marked with "⚠" are important for maintaining the safety of the set. Be sure to replace these parts with specified ones for maintaining the safety and performance of the set.

SHARP CORPORATION

This document has been published to be used for after sales service only.
The contents are subject to change without notice.

NO.	PARTS CODE	PRICE RANK	NEW MARK	PART DELIVERY	DESCRIPTION
[1] PRINTED WIRING BOARD ASSEMBLIES					
N	DKEYDF455FM07	CK	N	S	MAIN Unit
N	DUNTKF494FM02	AP	N	S	R/C, LED Unit
N	DUNTKF493FM03	AP	N	S	ICON Unit
N	DUNTKF493FM04	AQ	N	S	LOGO Unit
N	RUNTKA761WJQZ		N	S	TOUCH SENSOR Key Unit
N	RUNTKA729WJQZ		N	S	POWER/LED CONTROL Unit
N	RUNTK4512TPZA	BV	N	X	LCD CONTROL Unit
[2] LCD PANEL MODULE					
N	R1LK600D3LW20Z	ET	N	S	60" LCD Panel Module Unit

[3] CABINET PARTS

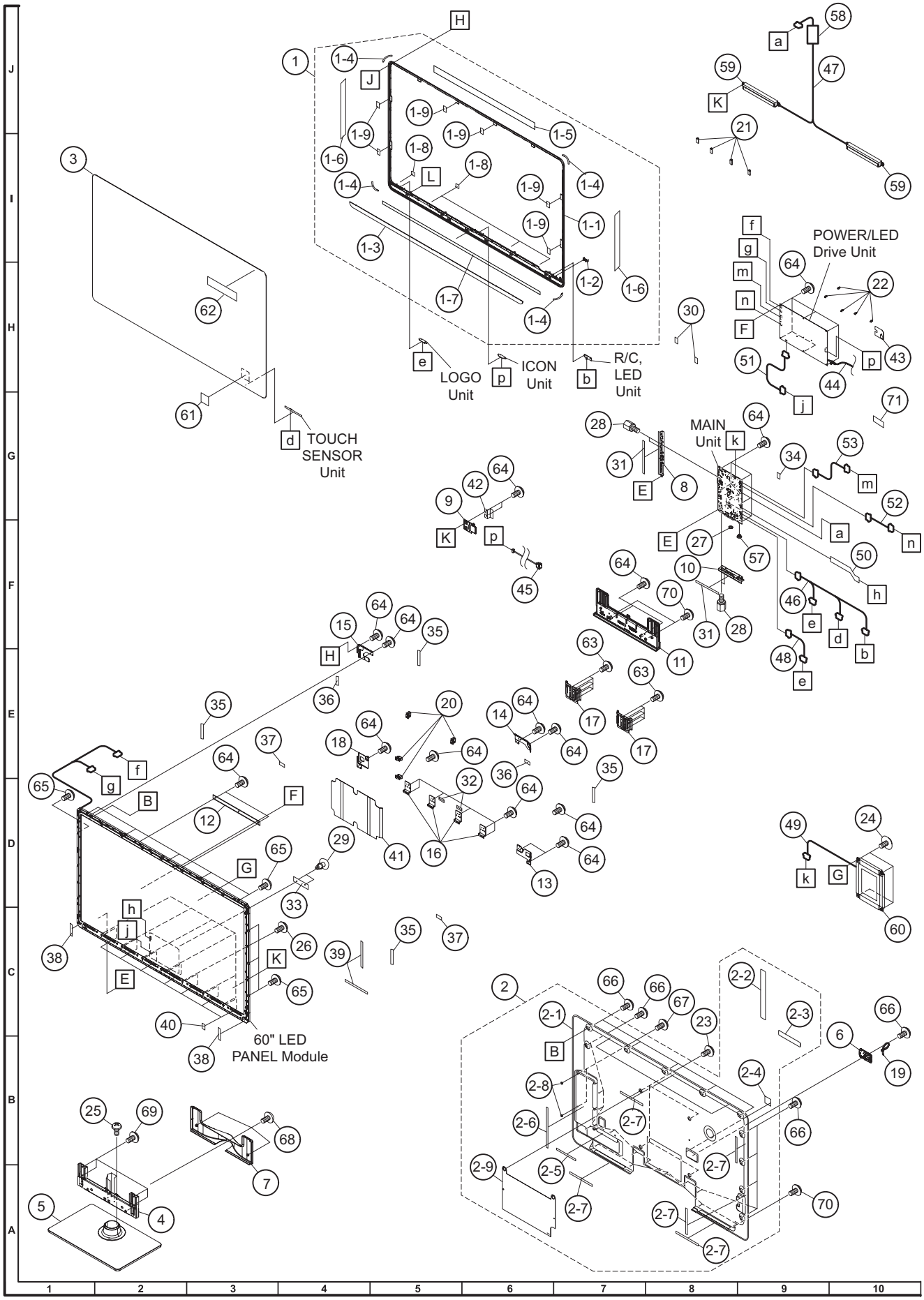

NO.	PARTS CODE	PRICE RANK	NEW MARK	PART DELIVERY	DESCRIPTION
[3] CABINET PARTS					
1	CCABAC609WJ35	CD	N	S	Front Cabinet Ass'y
1-1	Not Available	–	N	–	Front Cabinet
1-2	HDECQB420WJ3A			S	R/C Decoration Cover
1-3	HDECZA031WJSA			S	Front Decoration Plate
1-4	PSHEZA252WJZZ			S	Coner Tape, x4
1-5	PSHEZA256WJZZ			S	Up Side Tape
1-6	PSHEZA261WJZZ			S	Side Tape, x2
1-7	PSPAGA909WJZZ			S	Spacer
1-8	PSPAHC201WJZZ			S	Himelon, x4
1-9	PSPAZC528WJZZ			S	Spacer, x6
2	CCABBB701WE01		N	S	Rear Cabinet Ass'y
2-1	Not Available	–	N	–	Rear Cabinet
2-2	HiNDPD710WJSA	AG	N	S	Terminal Label (Side)
2-3	HiNDPD727WJSA	AE	N	S	Terminal Label (Bottom)
2-4	PSPAHC152WJ3Z	AD		S	Himelon
2-5	PSPAHC159WJZZ	AE		S	Himelon
2-6	PSPAHC160WJZZ	AC		J	Himelon
2-7	PSPAHC194WJZZ	AD		S	Himelon, x7
2-8	PSPAZC462WJZZ	AE	N	S	Spacer, x2
2-9	PZETKA539WJKZ	BD	N	S	Barrier Sheet
3	CPNLHA022WJ32		N	S	Glass Front Panel Ass'y
4	CANGKC709WJ01	BC		S	Support Ass'y
5	CDAi-A711WJ01	BR	N	S	Stand Base Ass'y
6	GCOVAD699WJ3A	AG		S	AC Cord Cover
7	GCOVAD702WJKA	AW	N	S	Support Cover
8	GCOVAD706WJSA	AL	N	S	Terminal Cover (Side)
9	GCOVAD709WJ1A	AG	N	S	ECO Switch Cover
10	GCOVAD711WJSA	AK	N	S	Terminal Cover (Bottom)
11	GCOVAD864WJ3A	AZ	N	S	Stand Cover
12	LANGFA776WJFW	AK	N	J	BL Support Angle
13	LANGKC694WJFW		N	S	LCD Fixing Angle B-L
14	LANGKC696WJFW		N	S	LCD Fixing Angle T-L
15	LANGKC697WJFW		N	S	LCD Fixing Angle T-R
16	LANGKC698WJFW		N	S	LCD Fixing Angle B-MA, x4
17	LANGKC701WJFW	AP	N	S	Stand Angle, x2
18	LANGKD010WJFW	AG		S	LCD Fixing Angle B-R
19	LHLDKA011WJKZ	AD	N	J	AC Cord Band
20	LHLDWA143WJKZ	AC	N	J	Holder, x4
21	LHLDWA294WJUZ	AC	N	J	Holder, x8
22	LHLDZA506WJKZ	AC	N	J	Spacer, x5
23	LX-BZA170WJF9	AC		J	Screw, x4
24	LX-BZA364WJF7	AB	N	J	Screw, x4 (for Sub Woofer)
25	LX-BZA366WJZZ	AD	N	S	Screw, x6 (Support Angle)
26	LX-BZA391WJF7	AB	N	S	Screw, x7
27	LX-NZA049WJFN	AC	N	J	Nut
28	NSFTZA362WJFW	AB		J	PWB Angle, x4
29	PCLiCA004WJKZ	AC		J	Rivet, x2
30	PCUSGA142WJKZ	AF		J	Rubber Bush, x2
31	PMLT-A578WJZZ	AE		S	Gasket, x2
32	PMLT-A634WJZZ	AK	N	S	Gasket, x2
33	PMLT-A636WJZZ	AF	N	J	Gasket
34	PMLT-A652WJZZ	AF	N	S	Gasket
35	PSPAGA888WJZZ	AB	N	J	Spacer, x4
36	PSPAGA932WJKZ	AE		S	Spacer, x2
37	PSPAGA934WJKZ	AD		S	Spacer, x2
38	PSPAH0053TPZZ	AC	N	J	Himelon, x2
39	PSPAHC160WJZZ	AC		J	Himelon, x2
40	PSPAZC634WJZZ	AC	N	S	Spacer, x7
41	PZETKA538WJKZ	BB		S	Barrier Sheet
42	PZETKA556WJKZ	AE		S	Insulation Sheet (ECO)
43	PZETKA562WJKZ	AF		S	Insulation Sheet (AC)
⚠ 44	QACCKA053WJPZ	AR	N	S	AC Cord (Except for U.K. and Russia)
⚠ 44	QACCBA102WJPZ	AT	N	S	AC Cord (for U.K.)
⚠ 44	QACCKA053WJPZ	AR	N	S	AC Cord (for Russia)
45	QCNW-K556WJQZ	AW	N	S	Connecting Cord (AS)
46	QCNW-K567WJQZ	AX	N	S	Connecting Cord (RA)
47	QCNW-K568WJQZ	AL	N	S	Connecting Cord (SP)
48	QCNW-K569WJQZ	AE	N	S	Connecting Cord (RL)
49	QCNW-K570WJQZ	AG	N	J	Connecting Cord (SB)
50	QCNW-K578WJQZ	AW	N	S	Connecting Cord (LW)
51	QCNW-K977WJQZ	AE	N	J	Connecting Cord (PL)
52	QCNW-K979WJQZ	AH	N	S	Connecting Cord (PD)
53	QCNW-K980WJQZ	AG	N	S	Connecting Cord (LB)
57	QEARZ0057CEFW	AB		J	Ground Part
58	RCORF0103CEZZ	AK		J	Core
59	RSP-ZA474WJZZ	AY	N	S	Speaker (L/R), x2
60	RSP-ZA475WJZZ	BA	N	S	Speaker (Woofer)
61	TLABZC354WJZZ	AB		S	Eco Label
62	TLABZC587WJZZ	AE	N	S	Quattron Label
63	XBBS740P06000	AA		J	Screw, x12
64	XBPS730P06WS0	AA		J	Screw, x33
65	XBPS730P10WS0	AA		J	Screw, x9
66	XBPS830P06WS0	AA		J	Screw, x19
67	XBPS830P14WS0	AB		J	Screw, x2

NO.	PARTS CODE	PRICE RANK	NEW MARK	PART DELIVERY	DESCRIPTION
[3] CABINET PARTS					
68	XBPS840P12000	AB	N	S	Screw, x3
69	XBPS950P12KS0	AC	N	S	Screw, x4
70	XEBS940P10000	AB		J	Screw, x7
71	TLABN0134BMZZ		N	S	Material Label

[4] SUPPLIED ACCESSORIES

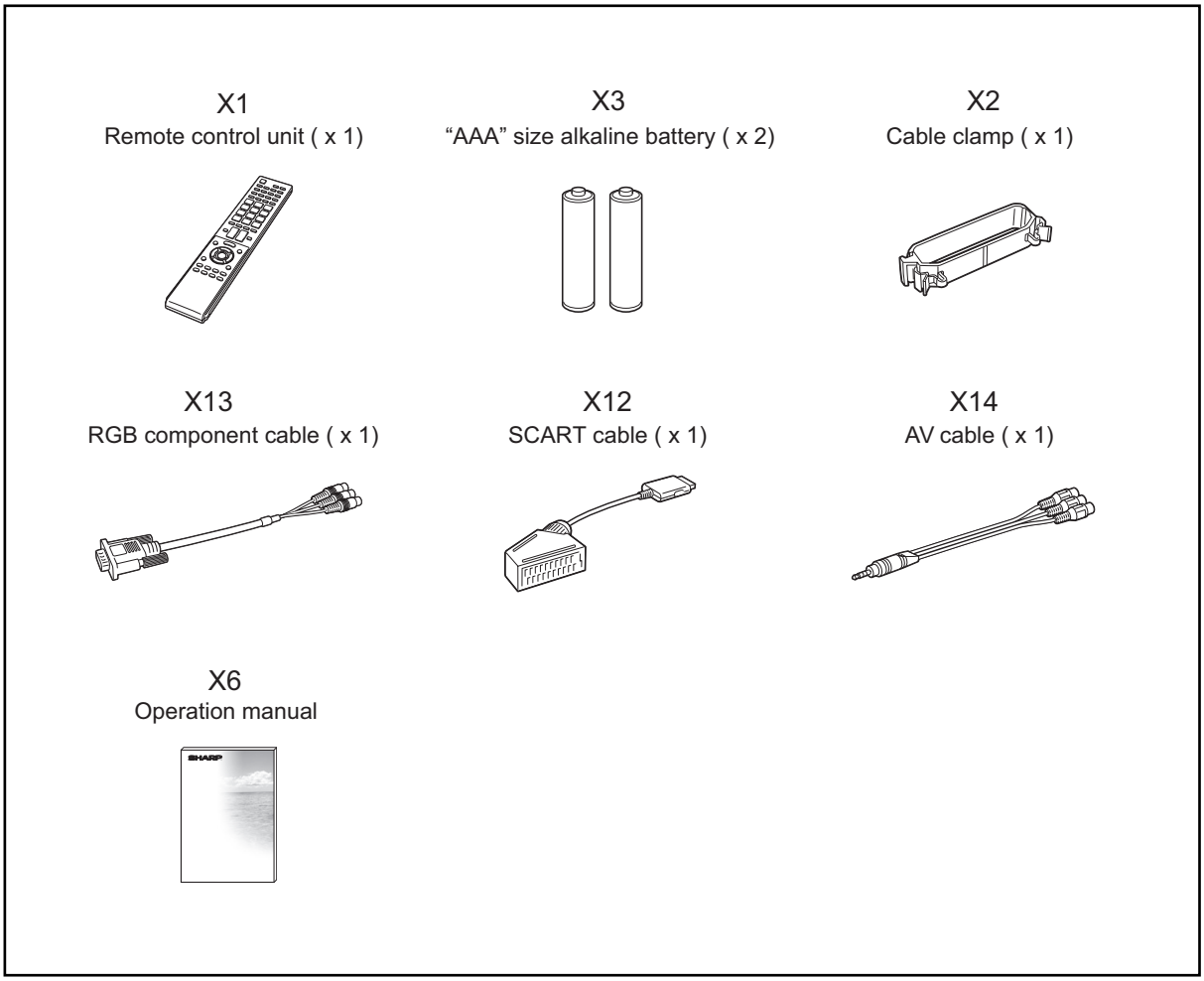

NO.	PARTS CODE	PRICE RANK	NEW MARK	PART DELIVERY	DESCRIPTION
[4] SUPPLIED ACCESSORIES					
X1	RRMCGA841WJSA	AX	N	S	Remote Control Unit
X2	LHLDWA298WJKA	AD		J	Cable Clamp
X3	Not Available	–		–	AAA size alkaline battery, x2
X4	TCAUZA408WJZZ		N	S	Eco Direction (Except for Russia)
X5	TCAUZA428WJZZ	AC	N	S	Caution Sheet
X6	TiNS-E812WJZZ	AV	N	S	Operation Manual
X6	TiNS-E813WJZZ	AW	N	S	Operation Manual (Except for U.K. and Russia)
X7	TCAUSA034WJZZ	AB		S	Caution Card (Except for U.K. and Russia)
X8	TGAN-B078WJZZ	AC		S	Guarantee Card (Except for U.K. and Russia)
X9	TGAN-B079WJZZ	AC		S	Guarantee Coupon (Except for U.K. and Russia)
X10	TGAN-A077WJZZ	AE	N	J	Guarantee Card (for Russia)
X10	TGAN-A801WJZZ	AD	N	S	Guarantee Card (for U.K.)
X11	TGAN-A802WJZZ	AD	N	S	AQUOS Care Plan (for U.K.)
X12	QCNWGA158WJPZ	AU	N	S	SCART Cable
X13	QCNWGA159WJPZ	AM	N	S	RGB Component Cable
X14	QCNWGA160WJPZ	AM	N	J	AV Cable

[5] PACKING PARTS (NOT REPLACEMENT ITEM)

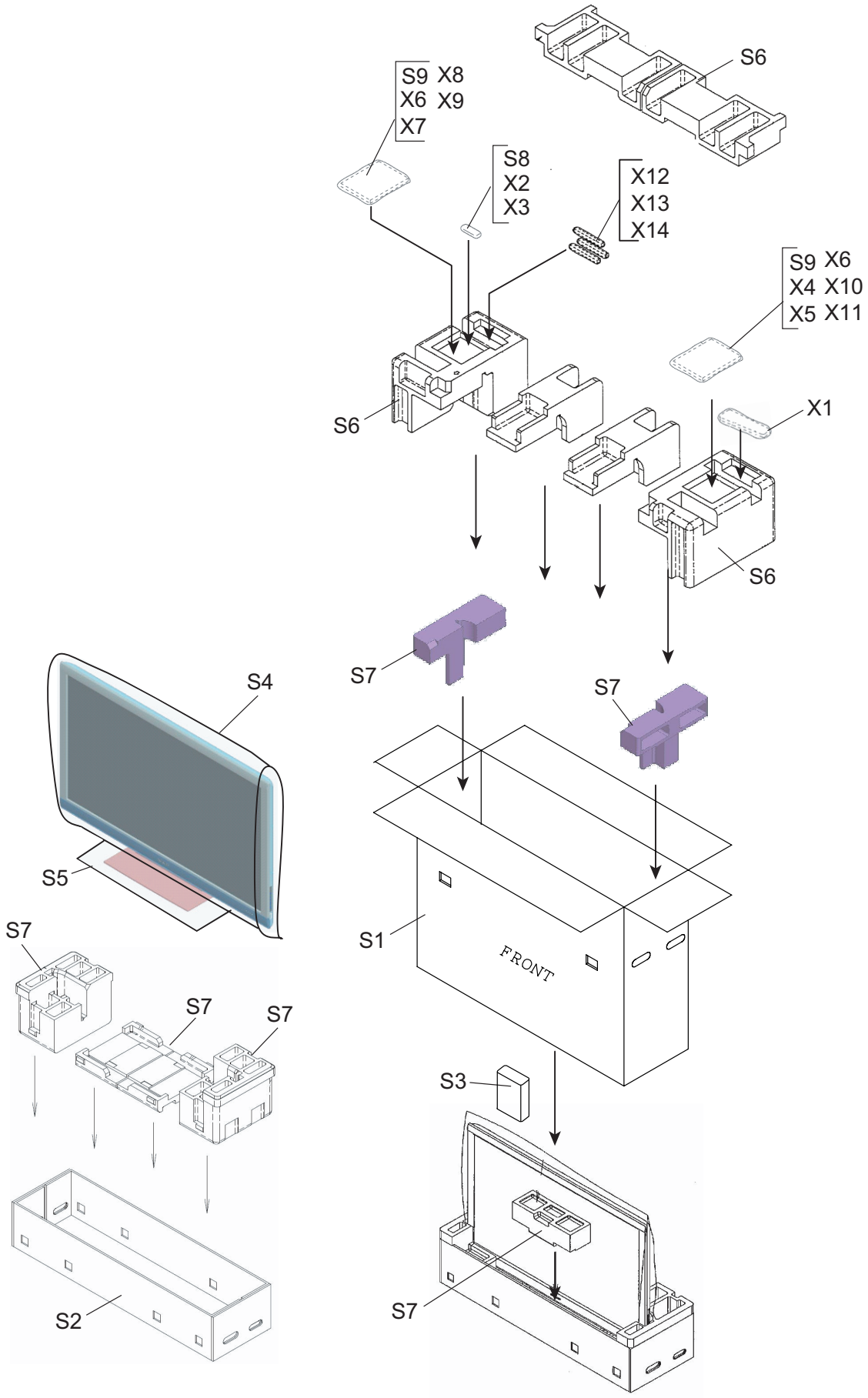

NO.	PARTS CODE	PRICE RANK	NEW MARK	PART DELIVERY	DESCRIPTION
[5] PACKING PARTS (NOT REPLACEMENT ITEM)					
S1	SPAKCF901WJZZ	−	N	−	Packing Case (Top)
S2	SPAKCF498WJZZ	−	N	−	Packing Case (Bottom)
S3	SPAKAA639WJZZ	−	N	−	Rear Pad
S4	SPAKPB550WJZZ	−	N	−	Wrapping Paper
S5	SPAKPB551WJZZ	−	N	−	Wrapping Paper (Stand)
S6	SPAKXC923WJZZ	−	N	−	Packing Add. (Top)
S7	SPAKXC928WJZZ	−	N	−	Packing Add. (Bottom)
S8	SSAKAA009WJZZ	−		−	Polyethylene Bag
S9	SSAKAA111WJZZ	−		−	Polyethylene BagÇP, x2
[6] SERVICE JIGS (USE FOR SERVICING)					
N	QCNW-G616WJQZ		N	J	Main Unit to LCD Control Unit (LW)
N	QCNW-G625WJQZ		N	J	Main Unit to Power Unit (PL)
N	QCNW-H184WJQZ		N	J	Main Unit to Power Unit (PD)
N	QCNW-H185WJQZ		N	J	Main Unit to Power (LED Drive) Unit (LB)
N	QCNW-K594WJQZ		N	J	Main Unit to R/C, LED Unit (RA)
N	QCNW-K595WJQZ		N	J	Main Unit to Speaker (SP)
N	QCNW-K596WJQZ		N	J	Main Unit to Icon Unit (RL)
N	QCNW-K597WJQZ		N	J	Main Unit to Woofer (SB)

SHARP

COPYRIGHT © 2010 BY SHARP CORPORATION

ALL RIGHTS RESERVED.

No Part of this publication may be reproduced,
stored in a retrieval system, or transmitted in
any from or by any means, electronic, mechanical,
photocopying, recording, or otherwise, without
prior written permission of the publisher.

Sep. 2010
SH. DS

SHARP CORPORATION
AV Systems Group
CS Promotion Center
Yaita,Tochigi 329-2193, Japan

SHARP SERVICE MANUAL

No. S90L560LE822E

LCD COLOUR TELEVISION

PWB Unit Edition

MODELS LC-60LE822E LC-60LE822ERU

In the interests of user-safety (Required by safety regulations in some countries) the set should be restored to its original condition and only parts identical to those specified should be used.

CONTENTS

OUTLINE

CHAPTER 1. PRINTED WIRING BOARD ASSEMBLIES
[1] MAIN Unit 1-1
[2] R/C, LED/ICON/LOGO Unit 1-5

CHAPTER 2. SCHEMATIC DIAGRAM
[1] DESCRIPTION OF SCHEMATIC DIAGRAM 2-1
[2] SCHEMATIC DIAGRAM 2-2

Parts Guide

Parts marked with "⚠" are important for maintaining the safety of the set. Be sure to replace these parts with specified ones for maintaining the safety and performance of the set.

SHARP CORPORATION

This document has been published to be used for after sales service only.
The contents are subject to change without notice.

OUTLINE

- **We inform you that service parts in the PWB Unit.**

Unit

Model Name	Unit name	Description
LC-60LE822E LC-60LE822ERU	DKEYDF455FM07	MAIN Unit
	DUNTKF494FM02	R/C, LED Unit
	DUNTKF493FM03	ICON Unit
	DUNTKF493FM04	LOGO Unit

CHAPTER 1. PRINTED WIRING BOARD ASSEMBLIES

[1] MAIN Unit

MAIN Unit (Side-A)

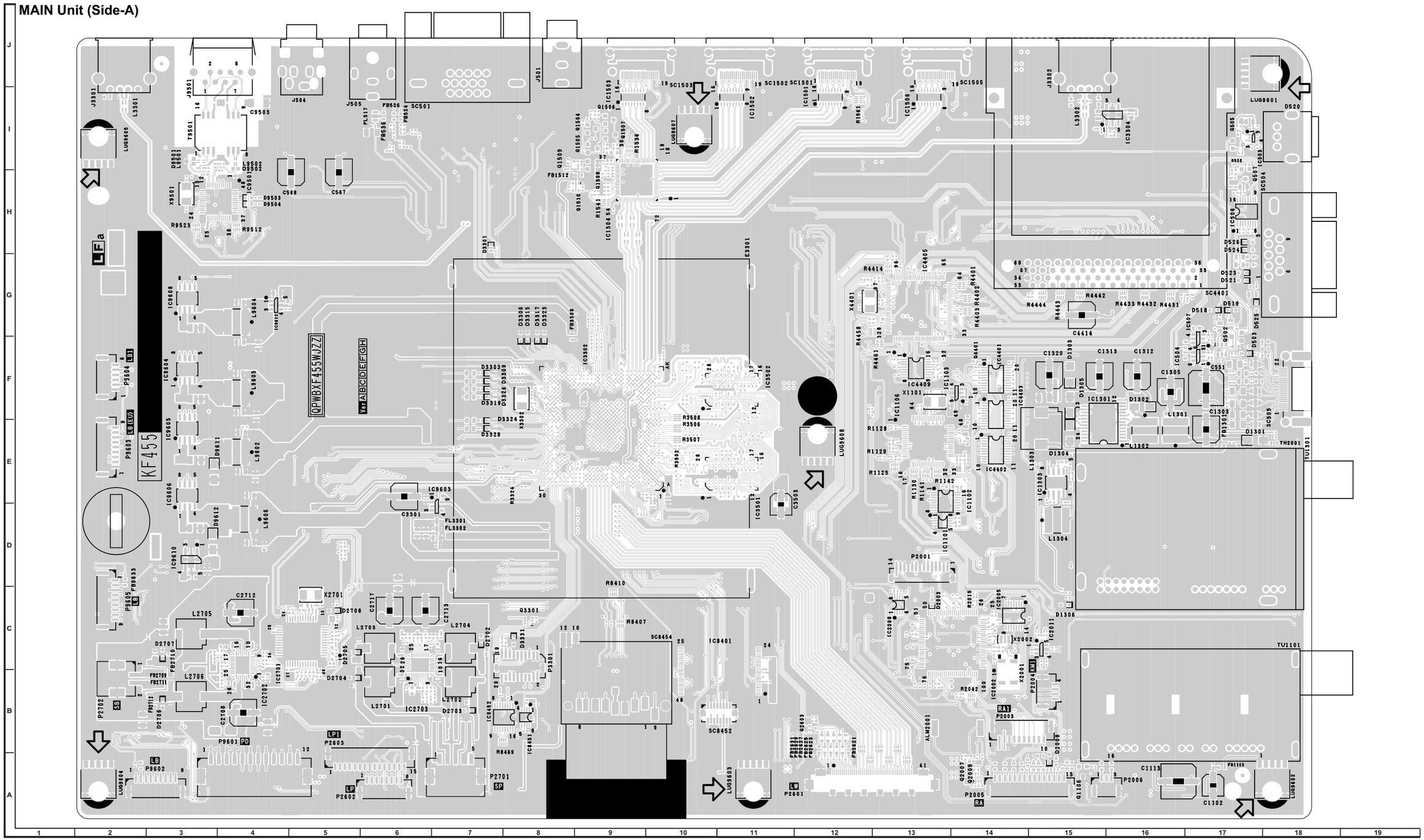

MAIN Unit (Chip Parts Side-A)

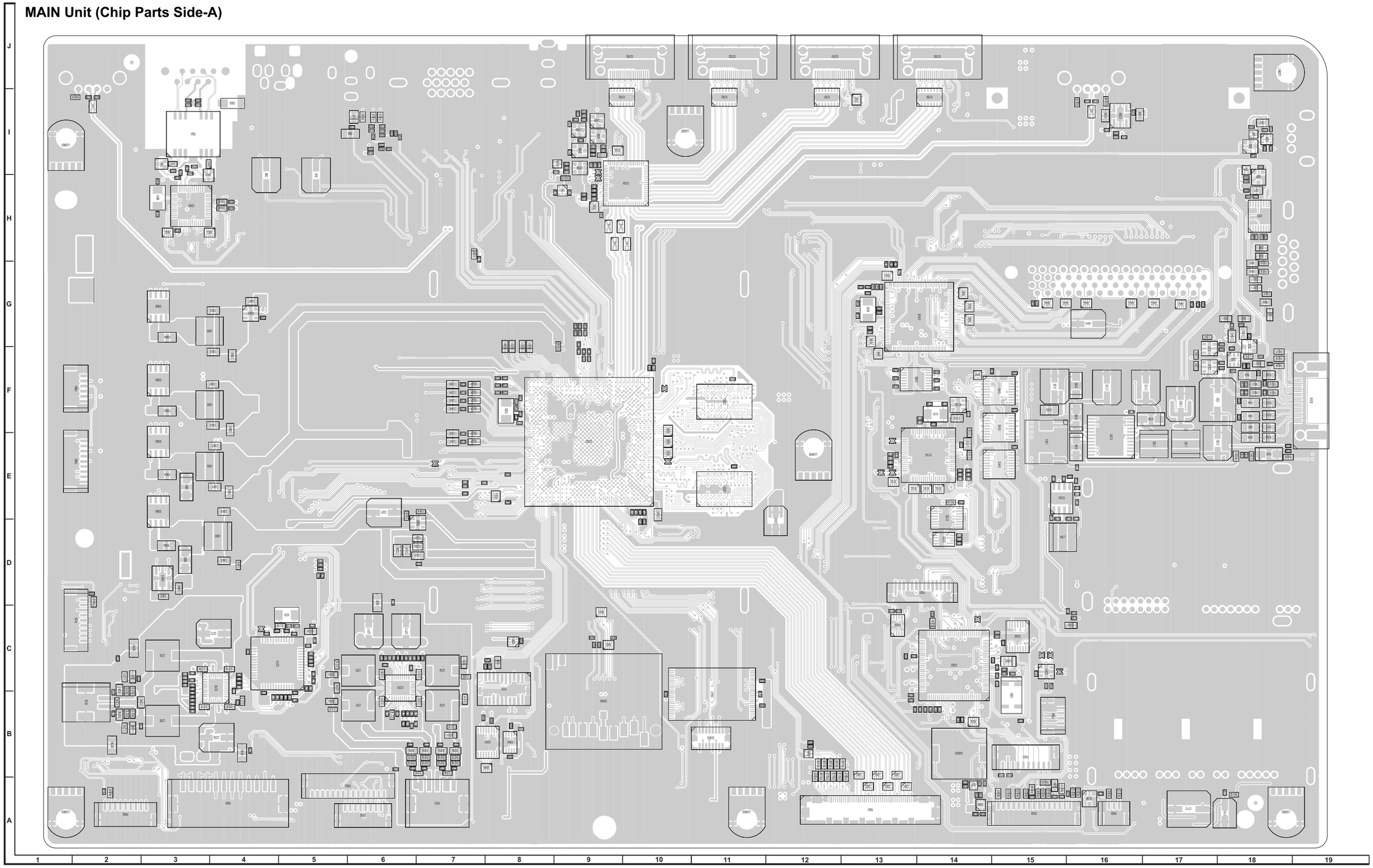

MAIN Unit (Side-B)

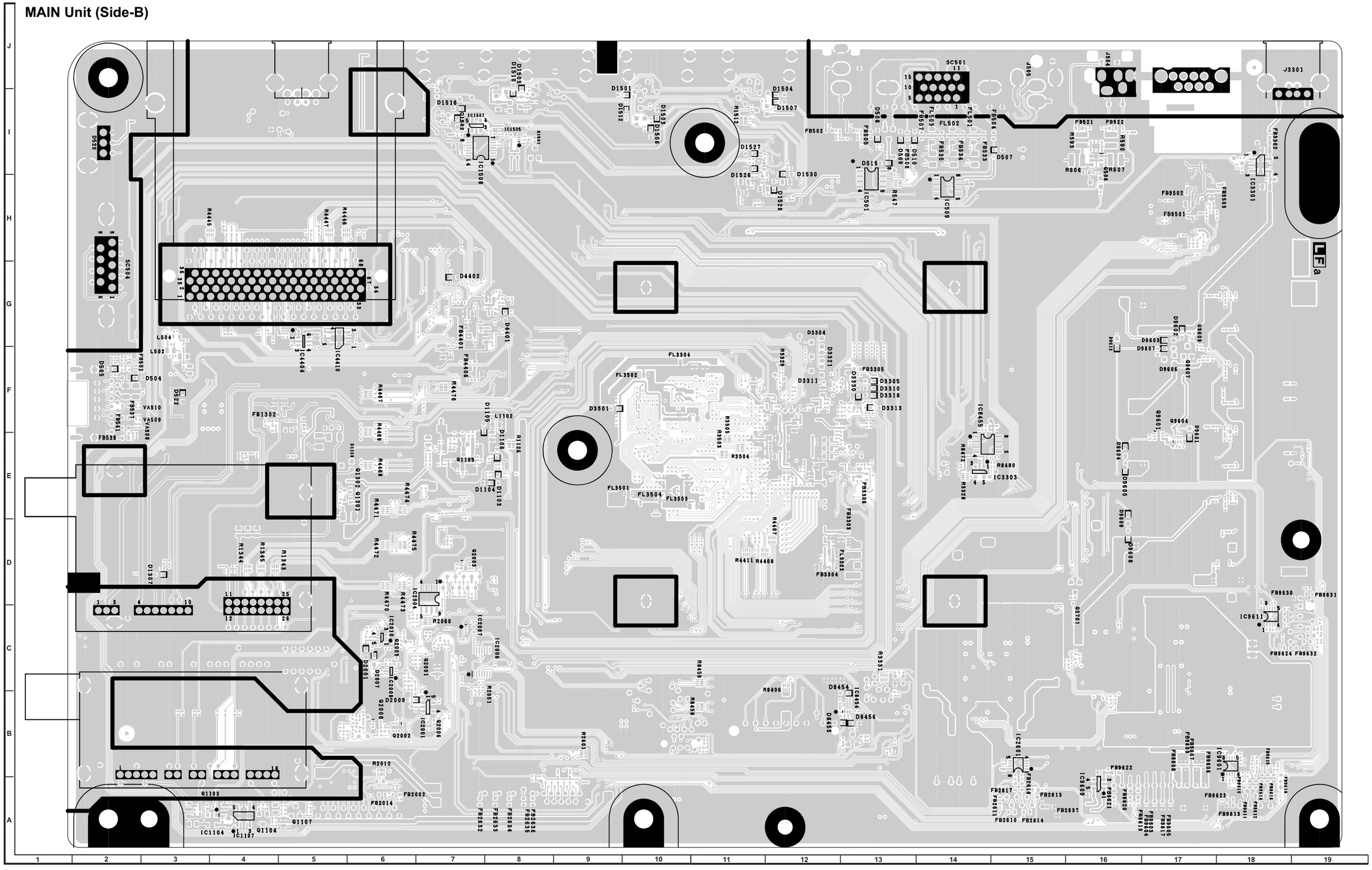

MAIN Unit (Chip Parts Side-B)

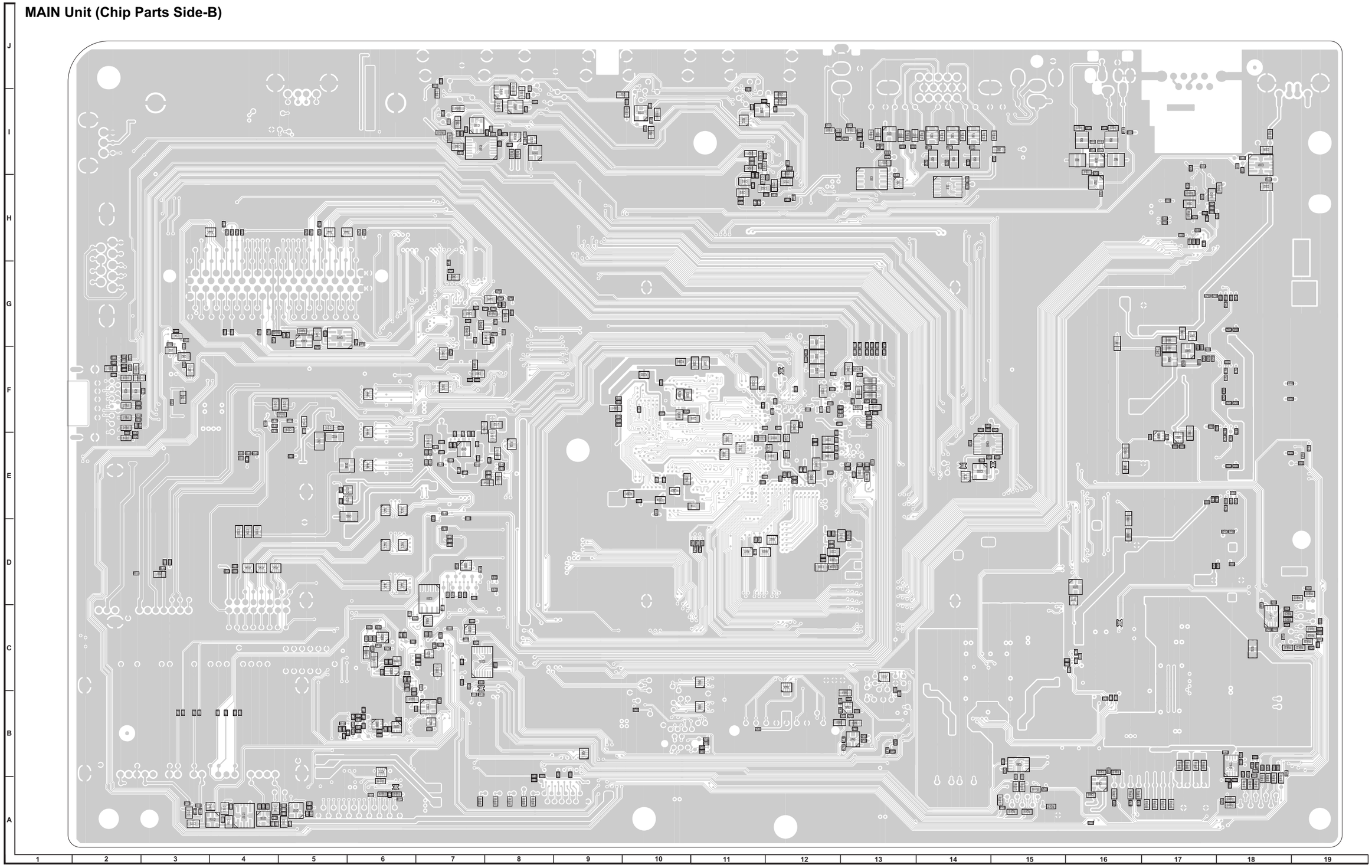

[2] R/C, LED/ICON/LOGO Unit

R/C, LED Unit (Side-A)

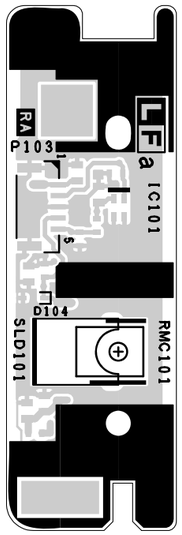

R/C, LED Unit (Side-B)

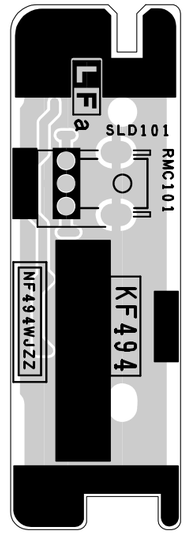

ICON Unit (Side-A)

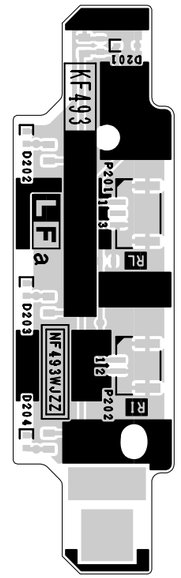

LOGO Unit (Side-A)

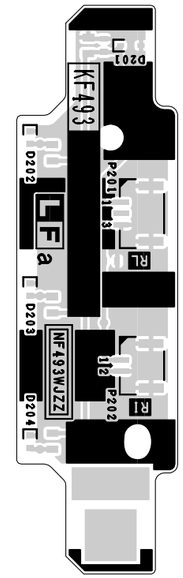

R/C, LED Unit (Chip Parts Side-A)

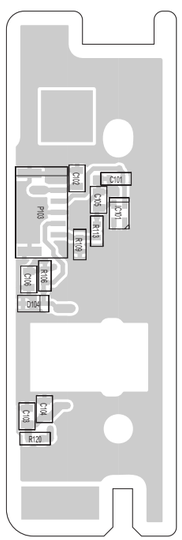

ICON Unit (Chip Parts Side-A)

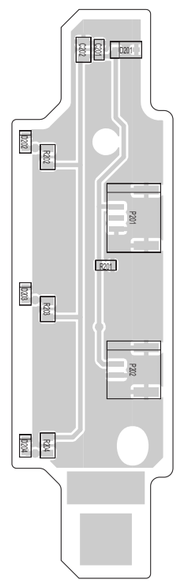

LOGO Unit (Chip Parts Side-A)

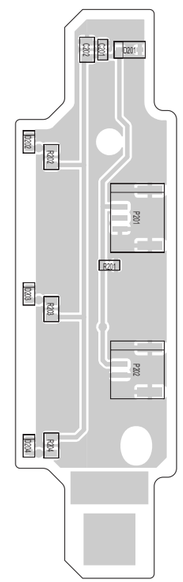

CHAPTER 2. SCHEMATIC DIAGRAM

[1] DESCRIPTION OF SCHEMATIC DIAGRAM

1. VOLTAGE MEASUREMENT CONDITION:

1) The voltages at test points are measured on exclusive AC adaptor and the stable supply voltage of AC 220-240V.
   Signals are fed by a color bar signal generator for servicing purpose and the above voltages are measured with a 20k ohm/V tester.

2. INDICATION OF RESISTOR & CAPACITOR:

RESISTOR

1) The unit of resistance "Ω" is omitted.
   (K=kΩ=1000Ω, M=MΩ).
2) All resistors are ± 5%, unless otherwise noted.
   (K= ± 10%, F= ± 1%, D= ± 0.5%)
3) All resistors are 1/16W, unless otherwise noted.

CAPACITOR

1) All capacitors are μF, unless otherwise noted.
   (P=pF=μμF).
2) All capacitors are 50V, unless otherwise noted.

CAUTION:
This circuit diagram is original one, therefore there may be a slight difference from yours.

SAFETY NOTES:
1) DISCONNECT THE AC PLUG FROM THE AC OUTLET BEFORE REPLACING PARTS.
2) SEMICONDUCTOR HEAT SINKS SHOULD BE REGARDED AS POTENTIAL SHOCK HAZARDS WHEN THE CHASSIS IS OPERATING.

IMPORTANT SAFETY NOTICE:
PARTS MARKED WITH " ⚠ " ( ) ARE IMPORTANT FOR MAINTAINING THE SAFETY OF THE SET. BE SURE TO REPLACE THESE PARTS WITH SPECIFIED ONES FOR MAINTAINING THE SAFETY AND PERFORMANCE OF THE SET.

[2] SCHEMATIC DIAGRAM

MAIN Unit-1

⚠ AND SHADED COMPONENTS=SAFETY RELATED PARTS

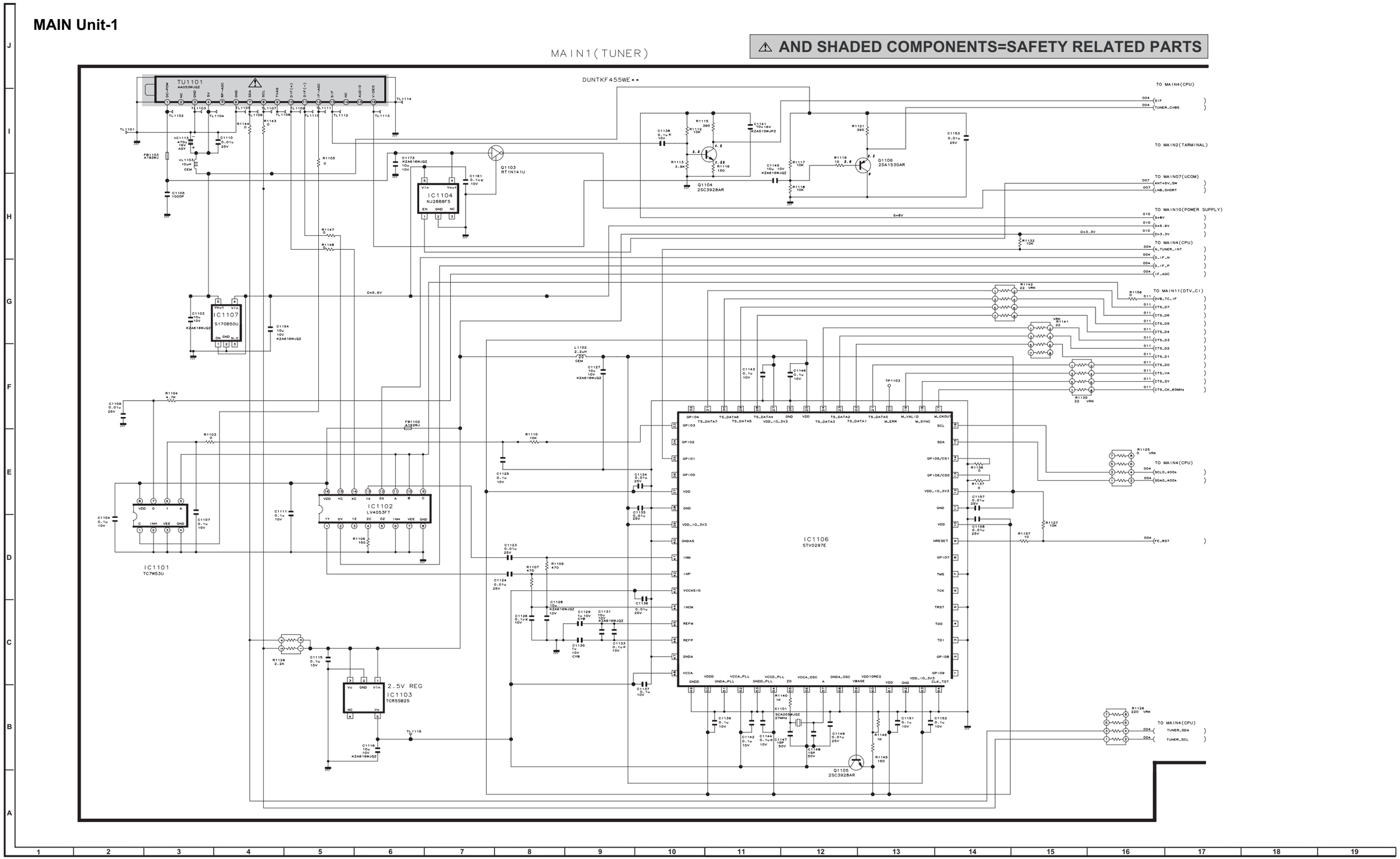

MAIN Unit-2

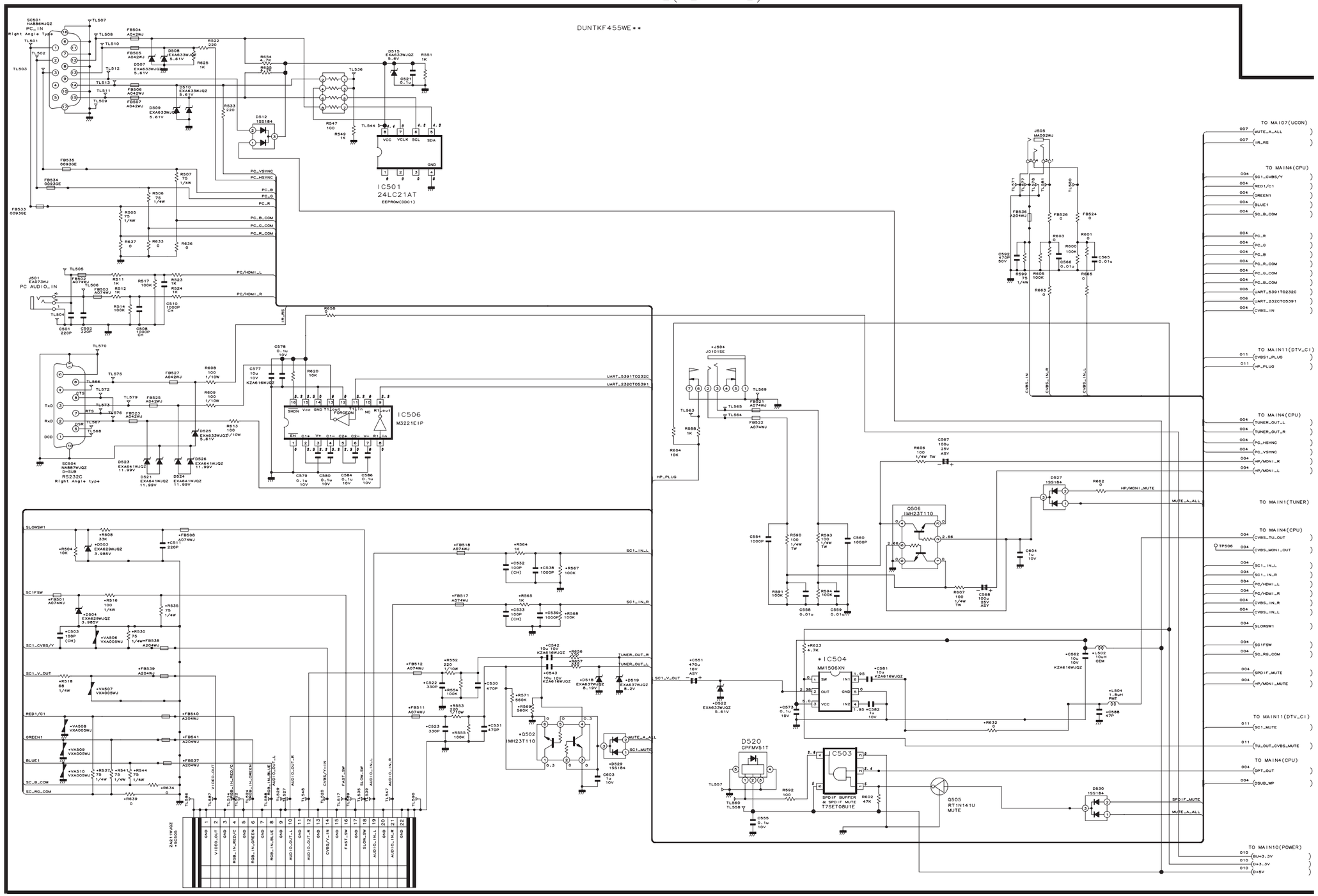
MAIN2(TERMINAL)
DUNTKF455WE**
IC501
24LC21AT
EEPROM(DDC1)
IC506
M3221EIP
IC504
MM1506XN
Q506
IMH23T110
Q502
IMH23T110
D520
GPFMV51T
Q505
RT1N141U
MUTE
TO MAIN7(UCON)
TO MAIN4(CPU)
TO MAIN11(DTV_CI)
TO MAIN1(TUNER)
TO MAIN10(POWER)

MAIN Unit-3

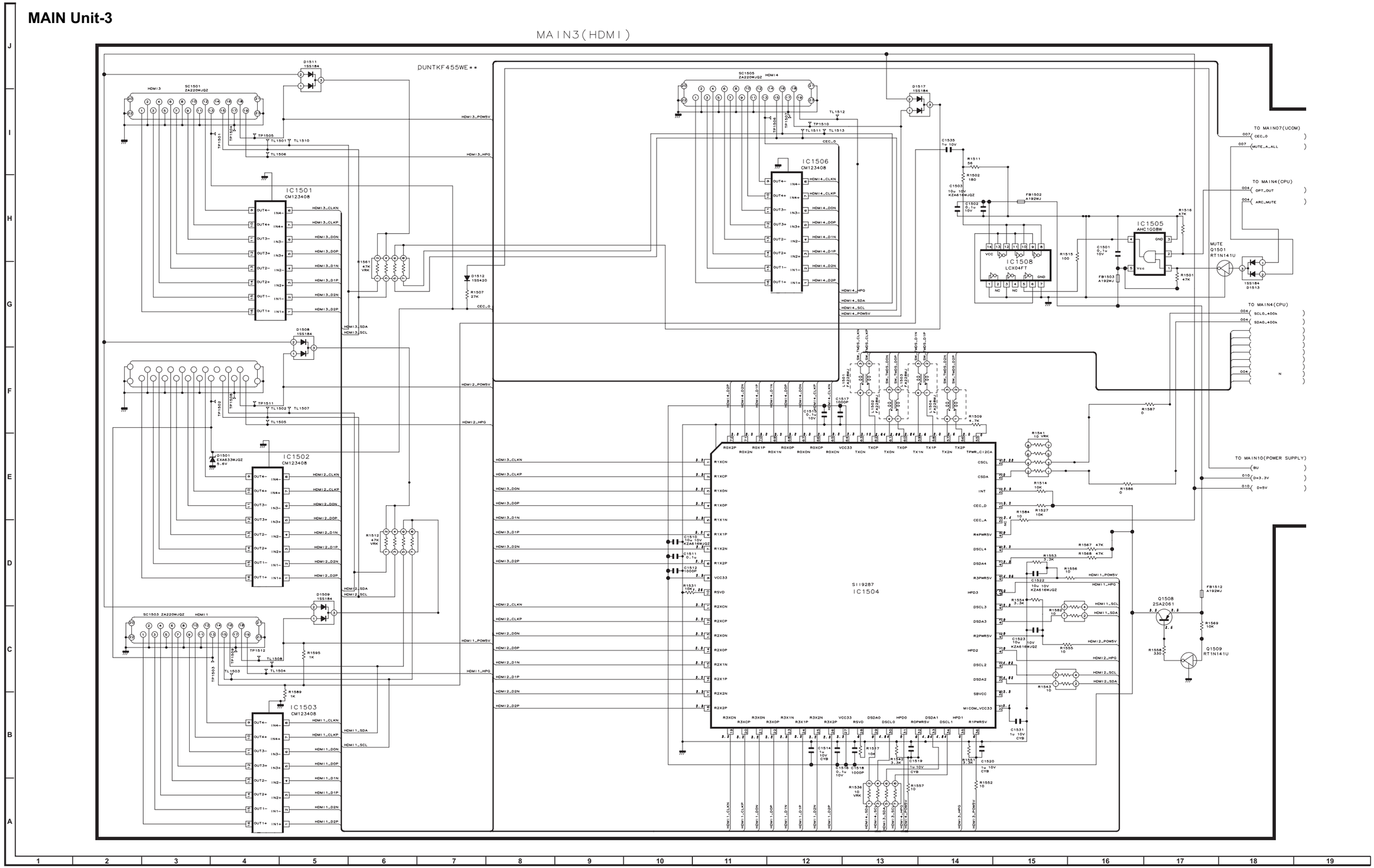
MAIN3(HDMI)
DUNTKF455WE**
IC1501
CM123408
IC1502
CM123408
IC1503
CM123408
IC1506
CM123408
IC1504
SII9287
IC1508
LCX04FT
IC1505
AHC1G08W
Q1501
RT1N141U
Q1508
2SA2061
Q1509
RT1N141U
TO MAIN07(UCOM)
TO MAIN4(CPU)
TO MAIN10(POWER SUPPLY)

MAIN Unit-4

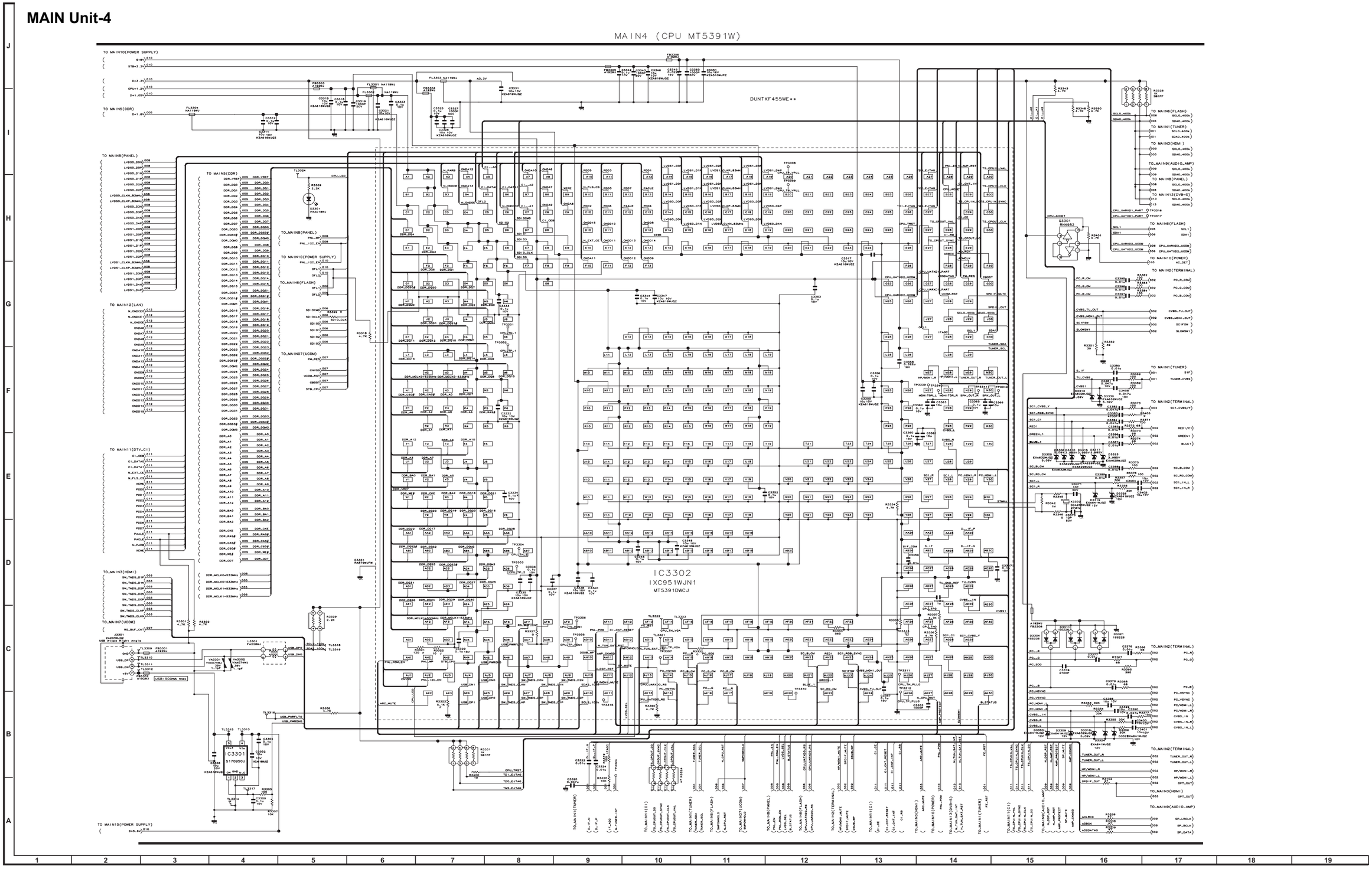
MAIN4 (CPU MT5391W)
DUNTKF455WE**
IC3302
IXC951WJN1
MT5391DWCJ
IC3301
S17DB50U

MAIN Unit-5

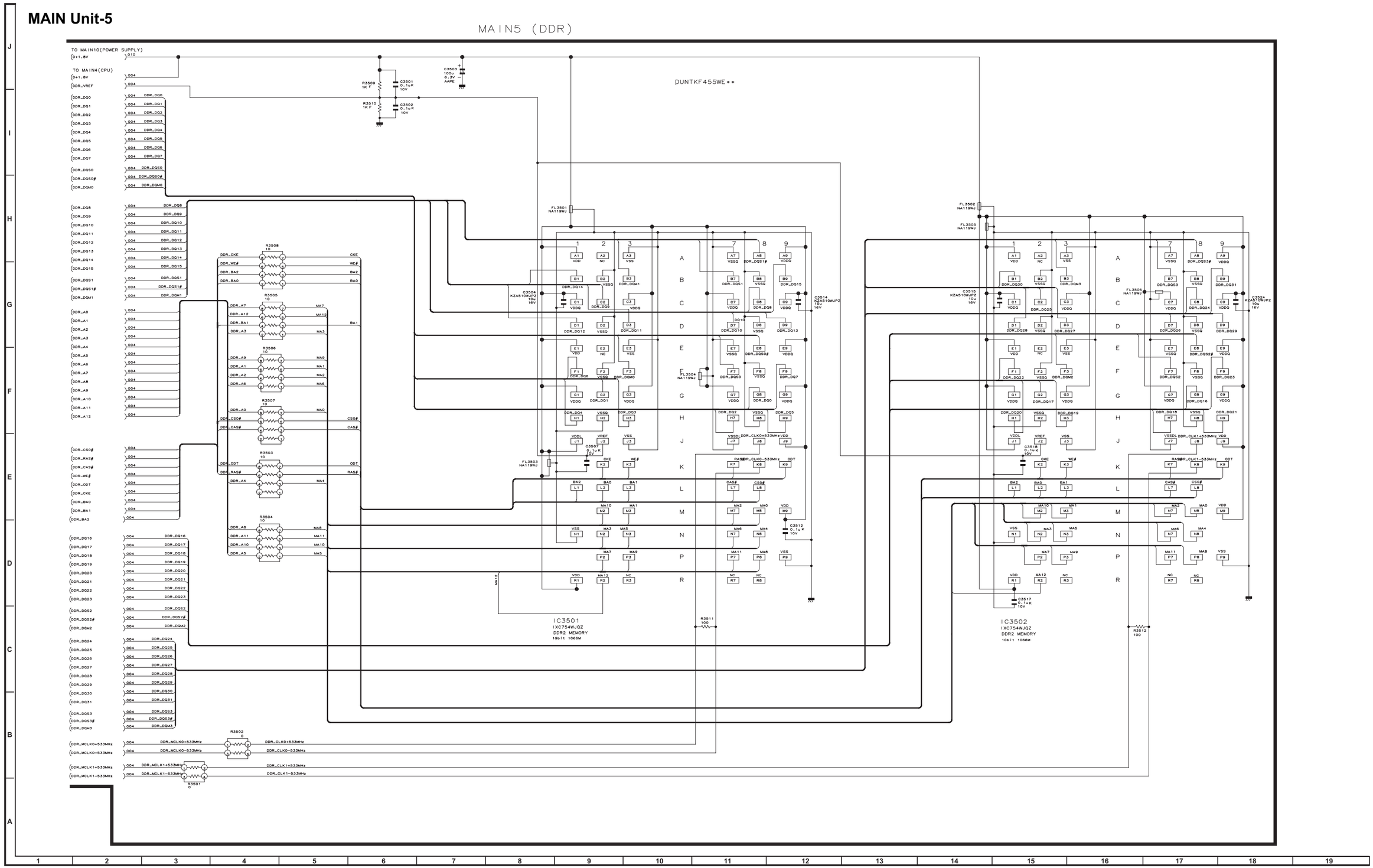
MAIN5 (DDR)
DUNTKF455WE**
IC3501
IXC754WJQZ
DDR2 MEMORY
1Gbit 1066M
IC3502
IXC754WJQZ
DDR2 MEMORY
1Gbit 1066M

MAIN Unit-6

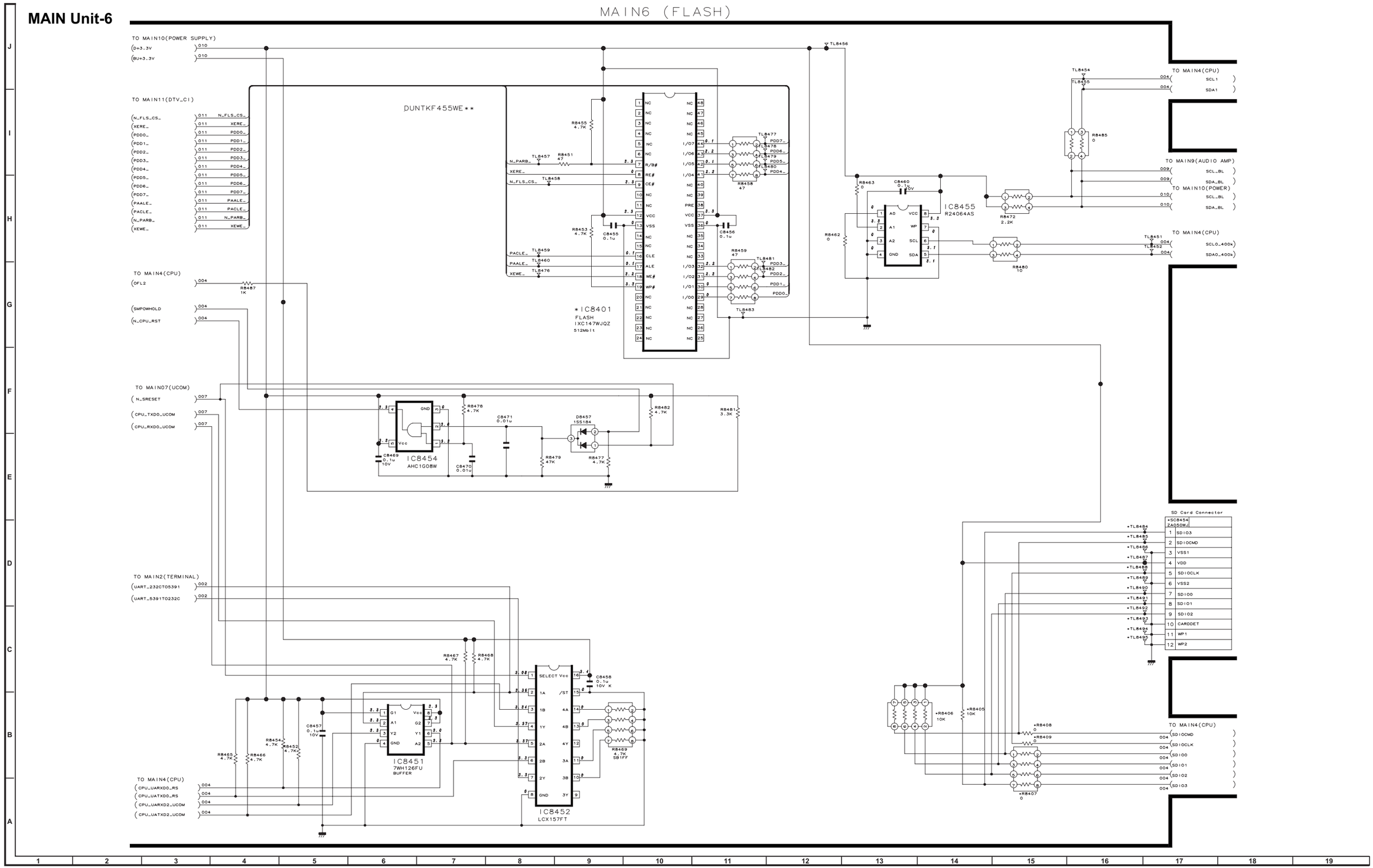
MAIN6 (FLASH)
TO MAIN10(POWER SUPPLY)
D+3.3V
BU+3.3V
TO MAIN11(DTV_CI)
N_FLS_CS_
XERE_
PDD0_
PDD1_
PDD2_
PDD3_
PDD4_
PDD5_
PDD6_
PDD7_
PAALE_
PACLE_
N_PARB_
XEWE_
DUNTKF455WE**
*IC8401
FLASH
IXC147WJQZ
512Mbit
IC8455
R24064AS
TO MAIN4(CPU)
SCL1
SDA1
TO MAIN9(AUDIO AMP)
SCL_BL
SDA_BL
TO MAIN10(POWER)
SCLO_400k
SDAO_400k
TO MAIN4(CPU)
OFL2
SMPOWHOLD
N_CPU_RST
TO MAIN07(UCOM)
N_SRESET
CPU_TXD0_UCOM
CPU_RXD0_UCOM
IC8454
AHC1G08W
SD Card Connector
*SC8454
ZACS0WJ
SDIO3
SDIOCMD
VSS1
VDD
SDIOCLK
VSS2
SDIO0
SDIO1
SDIO2
CARDDET
WP1
WP2
TO MAIN4(CPU)
SDIOCMD
SDIOCLK
SDIO0
SDIO1
SDIO2
SDIO3
TO MAIN2(TERMINAL)
UART_232CT0539I
UART_539IT0232C
IC8451
7WH126FU
BUFFER
IC8452
LCX157FT
TO MAIN4(CPU)
CPU_UARXD0_RS
CPU_UATXD0_RS
CPU_UARXD2_UCOM
CPU_UATXD2_UCOM

MAIN Unit-7

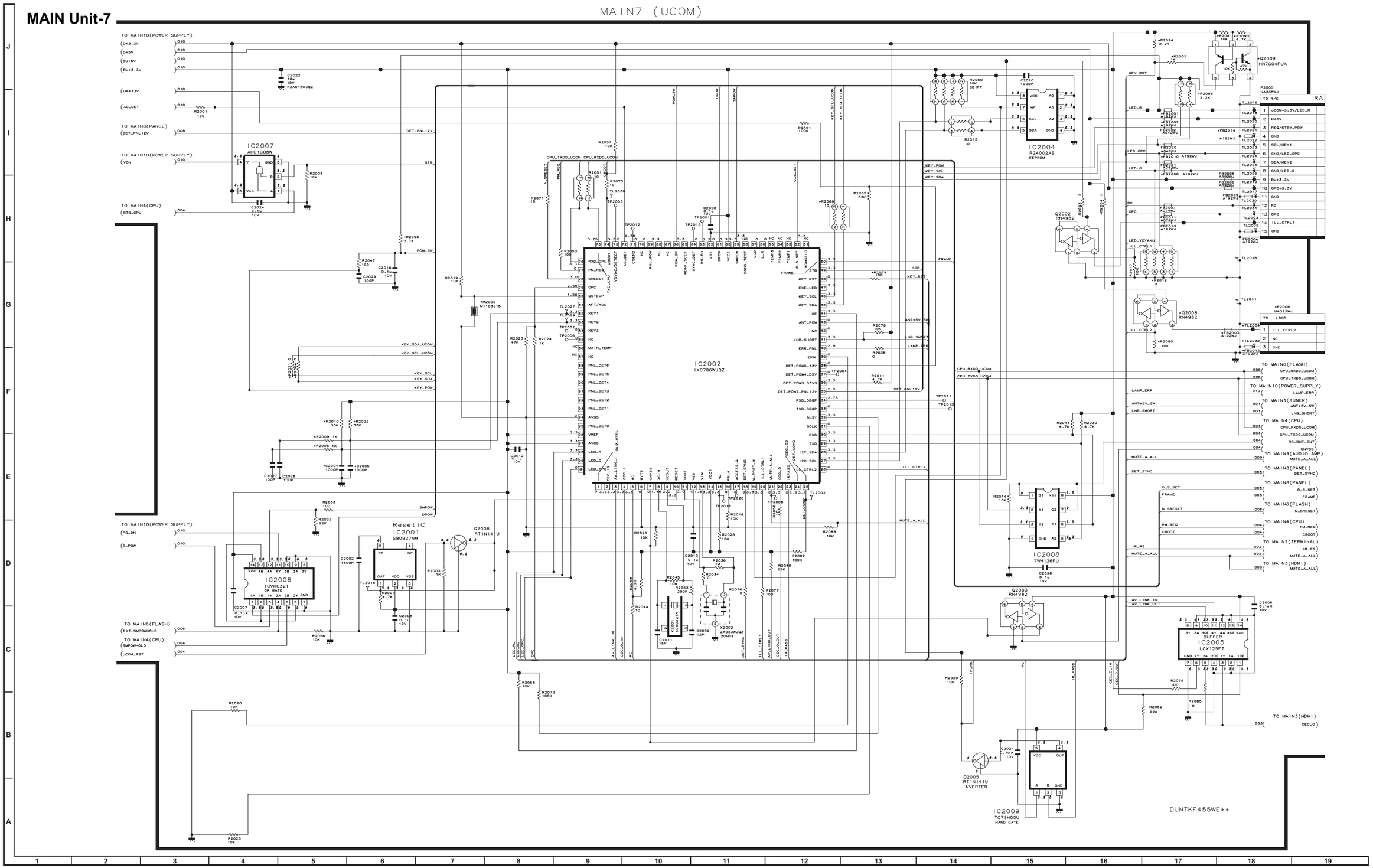
MAIN7 (UCOM)
IC2002
IXC786WJQZ
IC2004
R24002AS
EEPROM
IC2007
AHC1G08W
IC2006
TCVHC32T
OR GATE
Reset IC
IC2001
SB0927NM
IC2008
7WH126FU
IC2005
BUFFER
LCX125FT
IC2009
TC7SH00U
NAND GATE
Q2006
RT1N141U
Q2005
RT1N141U
INVERTER
Q2002
RN4982
Q2003
RN4982
Q2008
RN4982
Q2009
HN7G04FUA
DUNTKF455WE**

MAIN Unit-8

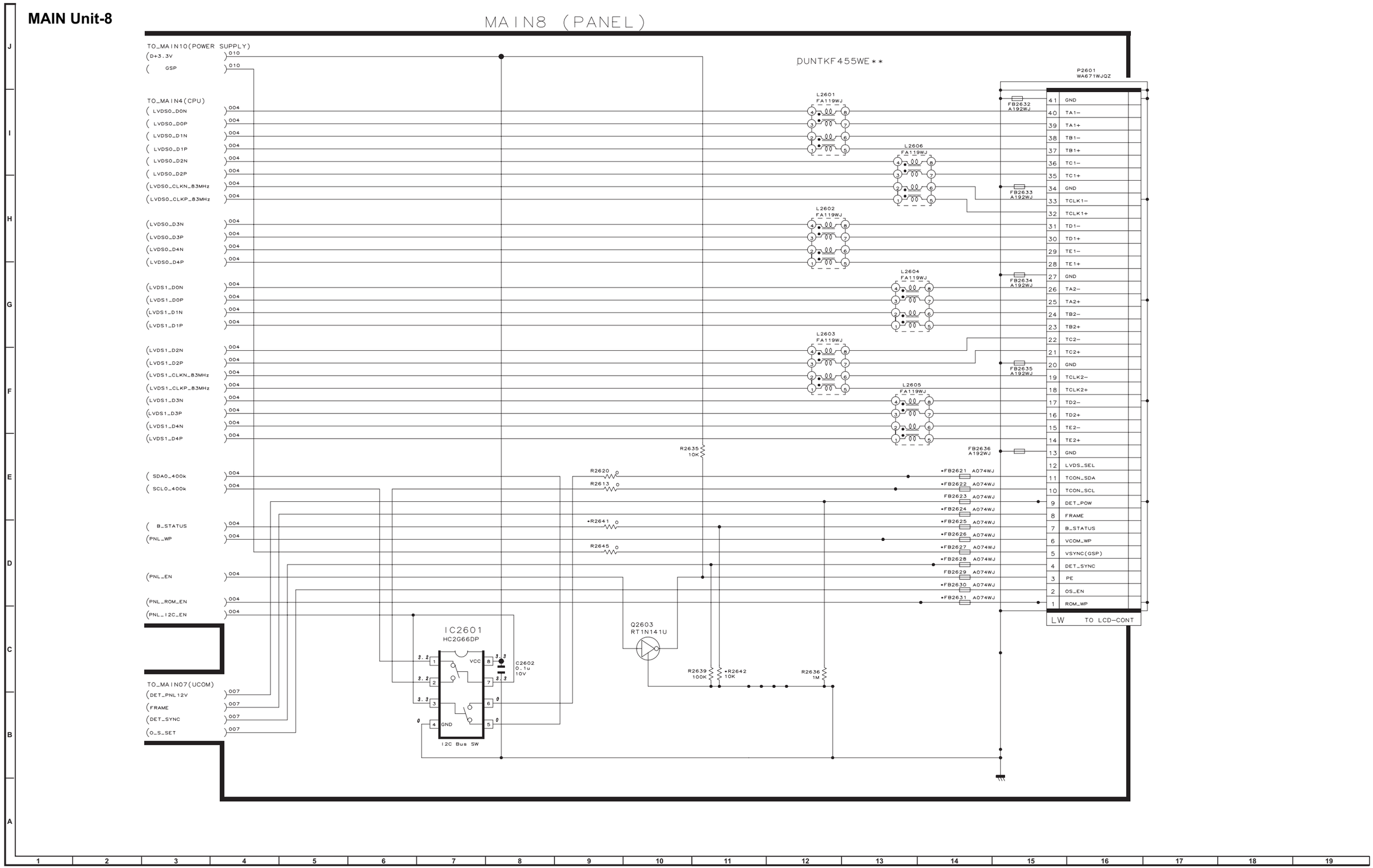
MAIN8 (PANEL)
TO_MAIN10(POWER SUPPLY)
D+3.3V
GSP
TO_MAIN4(CPU)
LVDS0_D0N
LVDS0_D0P
LVDS0_D1N
LVDS0_D1P
LVDS0_D2N
LVDS0_D2P
LVDS0_CLKN_83MHz
LVDS0_CLKP_83MHz
LVDS0_D3N
LVDS0_D3P
LVDS0_D4N
LVDS0_D4P
LVDS1_D0N
LVDS1_D0P
LVDS1_D1N
LVDS1_D1P
LVDS1_D2N
LVDS1_D2P
LVDS1_CLKN_83MHz
LVDS1_CLKP_83MHz
LVDS1_D3N
LVDS1_D3P
LVDS1_D4N
LVDS1_D4P
SDA0_400k
SCL0_400k
B_STATUS
PNL_WP
PNL_EN
PNL_ROM_EN
PNL_I2C_EN
TO_MAIN07(UCOM)
DET_PNL12V
FRAME
DET_SYNC
O_S_SET
DUNTKF455WE**
P2601
WA671WJQZ
L2601 FA119WJ
L2602 FA119WJ
L2603 FA119WJ
L2604 FA119WJ
L2605 FA119WJ
L2606 FA119WJ
FB2632 A192WJ
FB2633 A192WJ
FB2634 A192WJ
FB2635 A192WJ
FB2636 A192WJ
*FB2621 A074WJ
*FB2622 A074WJ
FB2623 A074WJ
*FB2624 A074WJ
*FB2625 A074WJ
*FB2626 A074WJ
*FB2627 A074WJ
*FB2628 A074WJ
FB2629 A074WJ
*FB2630 A074WJ
*FB2631 A074WJ
R2635 10K
R2620
R2613
*R2641
R2645
IC2601
HC2G66DP
VCC
GND
I2C Bus SW
C2602 0.1u 10V
Q2603 RT1N141U
R2639 100K
*R2642 10K
R2636 1M
41 GND
40 TA1−
39 TA1+
38 TB1−
37 TB1+
36 TC1−
35 TC1+
34 GND
33 TCLK1−
32 TCLK1+
31 TD1−
30 TD1+
29 TE1−
28 TE1+
27 GND
26 TA2−
25 TA2+
24 TB2−
23 TB2+
22 TC2−
21 TC2+
20 GND
19 TCLK2−
18 TCLK2+
17 TD2−
16 TD2+
15 TE2−
14 TE2+
13 GND
12 LVDS_SEL
11 TCON_SDA
10 TCON_SCL
9 DET_POW
8 FRAME
7 B_STATUS
6 VCOM_WP
5 VSYNC(GSP)
4 DET_SYNC
3 PE
2 OS_EN
1 ROM_WP
LW TO LCD-CONT

MAIN Unit-9

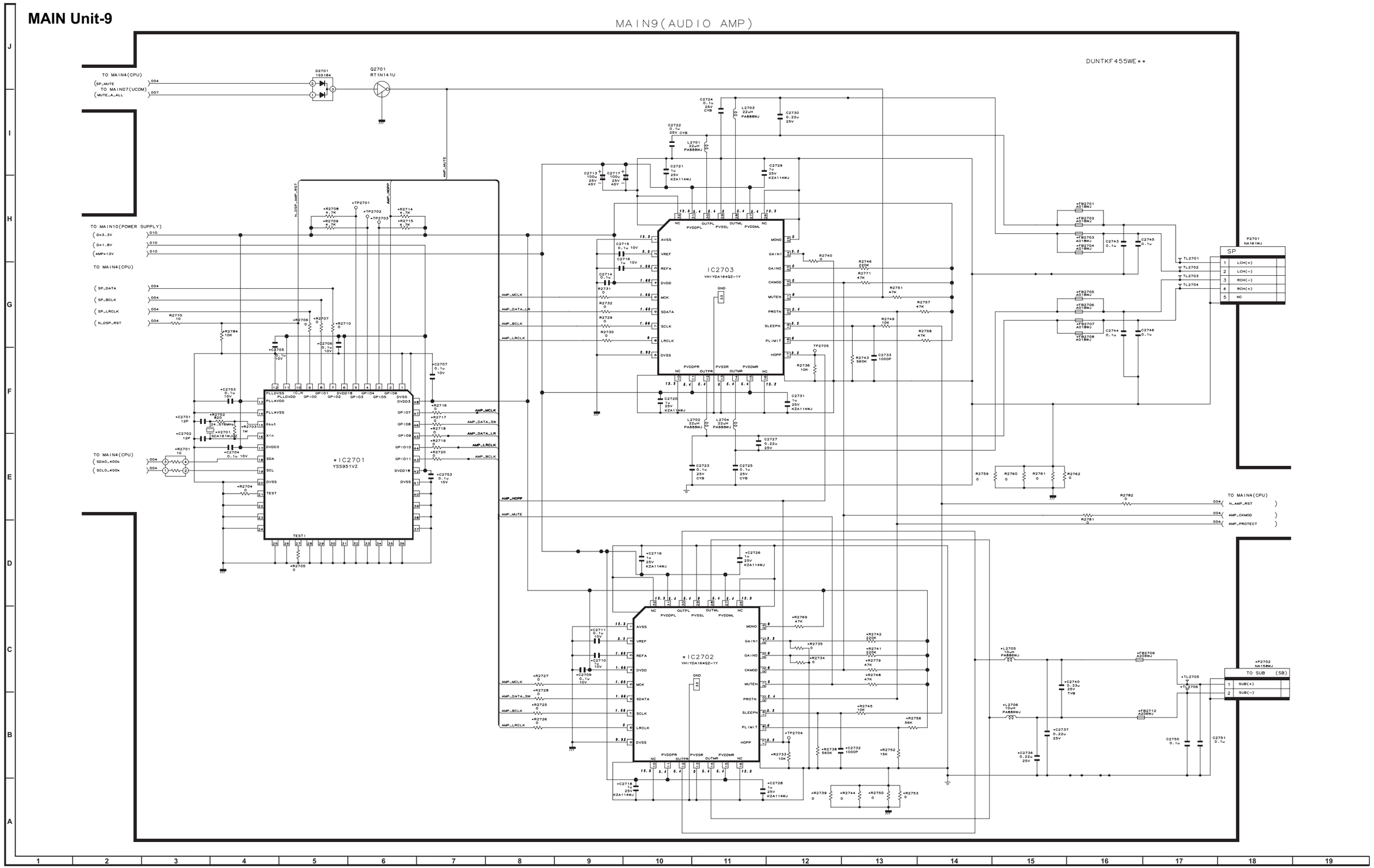
MAIN9(AUDIO AMP)
DUNTKF455WE**
IC2703
VHIYDA164QZ-1Y
*IC2701
YSS951VZ
*IC2702
VHIYDA164QZ-1Y
P2701
NA161WJ
SP
P2702
NA158WJ
TO SUB (SB)
TO MAIN4(CPU)
TO MAIN10(POWER SUPPLY)
TO MAIN07(UCOM)

MAIN Unit-10

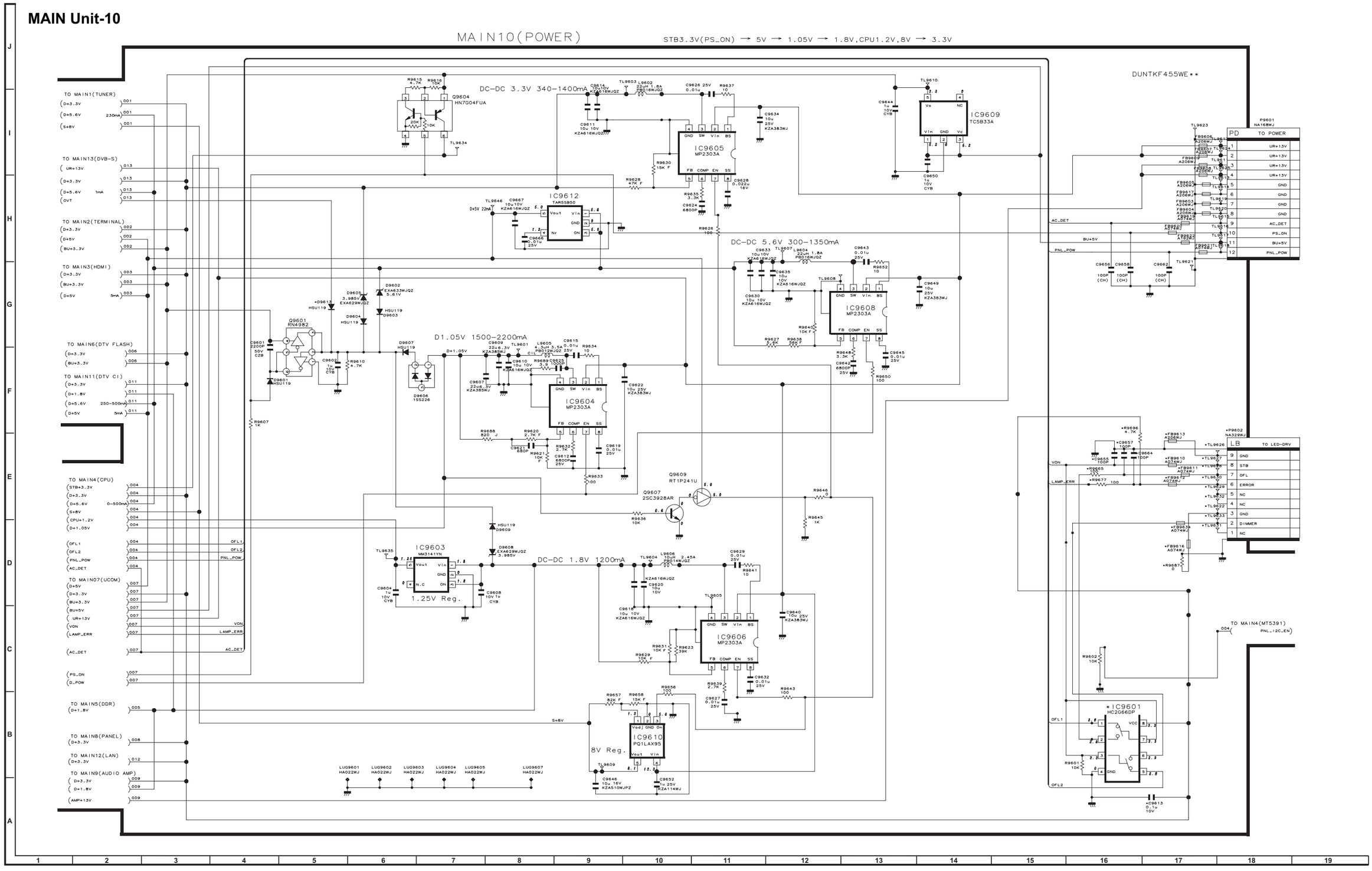
MAIN10(POWER)
STB3.3V(PS_ON) → 5V → 1.05V → 1.8V,CPU1.2V,8V → 3.3V
DC-DC 3.3V 340-1400mA
DC-DC 5.6V 300-1350mA
D1.05V 1500-2200mA
DC-DC 1.8V 1200mA
IC9605 MP2303A
IC9608 MP2303A
IC9604 MP2303A
IC9606 MP2303A
IC9612 TAR5SB50
IC9609 TC5B33A
IC9603 MM3141YN
1.25V Reg.
IC9610 PQ1LAX95
8V Reg.
IC9601 HC2G66DP
Q9604 HN7G04FUA
Q9601 RN4982
Q9609 RT1P241U
Q9607 2SC3928AR
DUNTKF455WE**
P9601 NA168WJ
PD TO POWER
UR+13V
GND
AC_DET
PS_ON
BU+5V
PNL_POW
P9602 NA329WJ
LB TO LED-DRV
GND
STB
OFL
ERROR
NC
DIMMER
VON
LAMP_ERR
TO MAIN1(TUNER)
TO MAIN13(DVB-S)
TO MAIN2(TERMINAL)
TO MAIN3(HDMI)
TO MAIN6(DTV FLASH)
TO MAIN11(DTV CI)
TO MAIN4(CPU)
TO MAIN07(UCOM)
TO MAIN5(DDR)
TO MAIN8(PANEL)
TO MAIN12(LAN)
TO MAIN9(AUDIO AMP)
TO MAIN4(MT5391)
PNL_I2C_EN

MAIN Unit-11

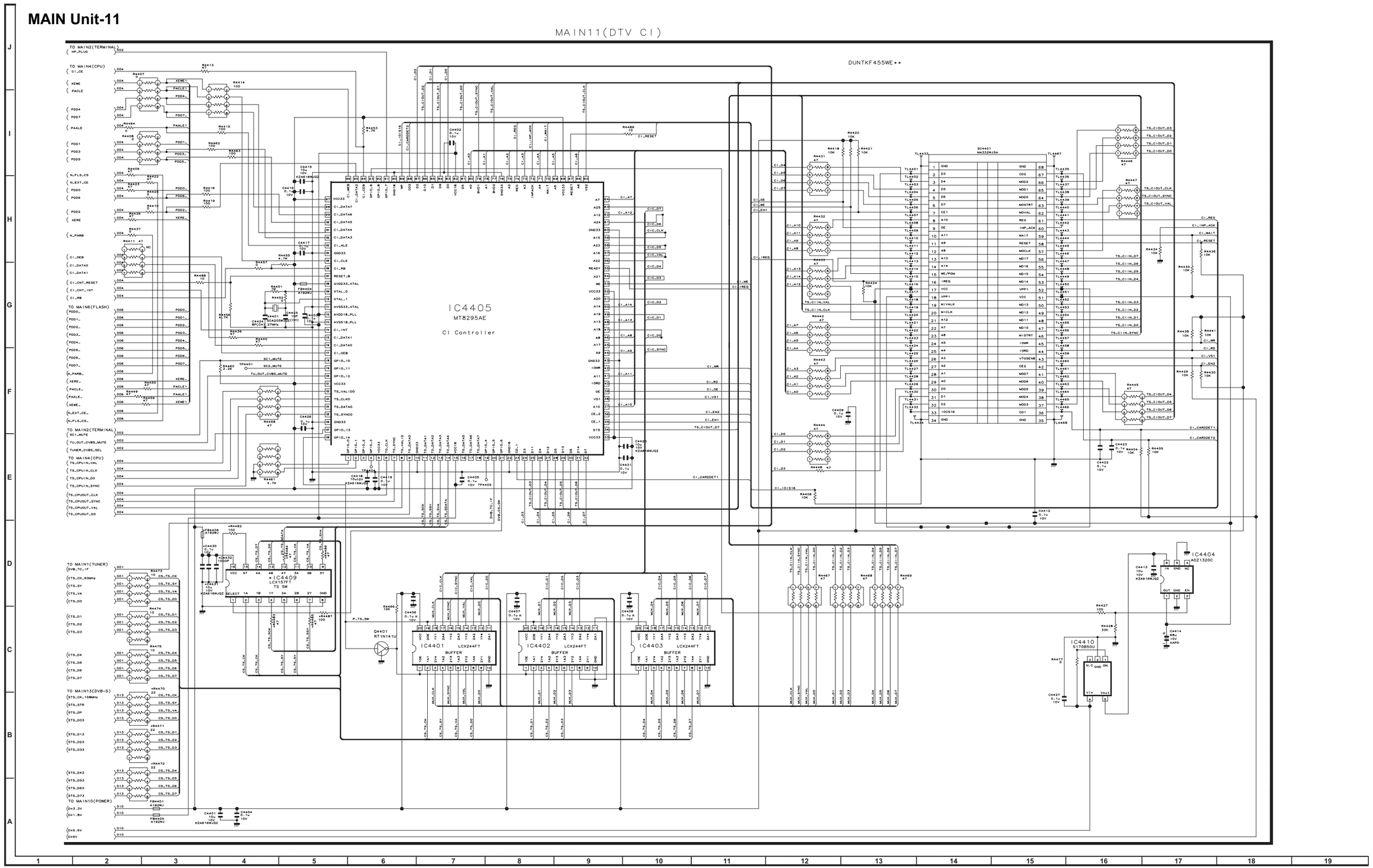
MAIN11(DTV CI)
IC4405
MT8295AE
CI Controller
DUNTKF455WE**
IC4409
LCX157FT
TS SW
IC4401
LCX244FT
BUFFER
IC4402
LCX244FT
BUFFER
IC4403
LCX244FT
BUFFER
IC4404
AOZ1320C
IC4410
S1T8850U
Q4401
RT1N141U

MAIN Unit-12

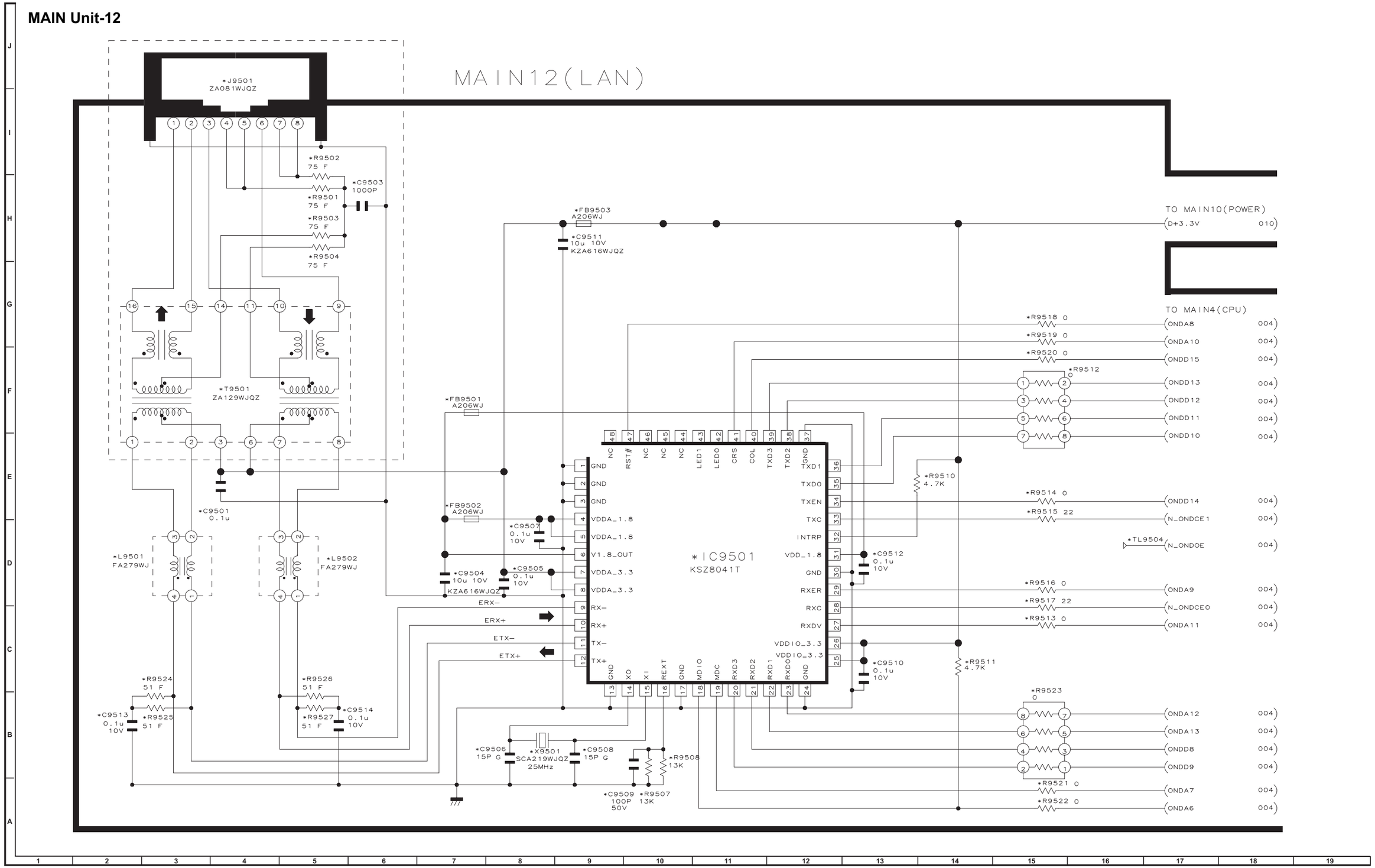
MAIN12(LAN)
*J9501
ZA081WJQZ
*R9502
75 F
*C9503
1000P
*R9501
75 F
*R9503
75 F
*R9504
75 F
*T9501
ZA129WJQZ
*C9501
0.1u
*L9501
FA279WJ
*L9502
FA279WJ
*R9524
51 F
*R9525
51 F
*C9513
0.1u
10V
*R9526
51 F
*R9527
51 F
*C9514
0.1u
10V
*FB9503
A206WJ
*C9511
10u 10V
KZA616WJQZ
*FB9501
A206WJ
*FB9502
A206WJ
*C9507
0.1u
10V
*C9504
10u 10V
KZA616WJQZ
*C9505
0.1u
10V
ERX−
ERX+
ETX−
ETX+
*IC9501
KSZ8041T
NC
RST#
LED1
LED0
CRS
COL
TXD3
TXD2
GND
TXD1
TXD0
TXEN
TXC
INTRP
VDD_1.8
RXER
RXC
RXDV
VDD10_3.3
VDDA_1.8
V1.8_OUT
VDDA_3.3
RX−
RX+
TX−
TX+
XO
XI
REXT
MDIO
MDC
RXD3
RXD2
RXD1
RXD0
*C9506
15P G
*X9501
SCA219WJQZ
25MHz
*C9508
15P G
*C9509
100P
50V
*R9507
13K
*R9508
13K
*R9510
4.7K
*R9511
4.7K
*C9512
0.1u
10V
*C9510
0.1u
10V
TO MAIN10(POWER)
D+3.3V 010
TO MAIN4(CPU)
*R9518 0
ONDA8 004
*R9519 0
ONDA10 004
*R9520 0
ONDD15 004
*R9512
0
ONDD13 004
ONDD12 004
ONDD11 004
ONDD10 004
*R9514 0
ONDD14 004
*R9515 22
N_ONDCE1 004
*TL9504
N_ONDOE 004
*R9516 0
ONDA9 004
*R9517 22
N_ONDCE0 004
*R9513 0
ONDA11 004
*R9523
0
ONDA12 004
ONDA13 004
ONDD8 004
ONDD9 004
*R9521 0
ONDA7 004
*R9522 0
ONDA6 004

MAIN Unit-13

⚠ AND SHADED COMPONENTS=SAFETY RELATED PARTS

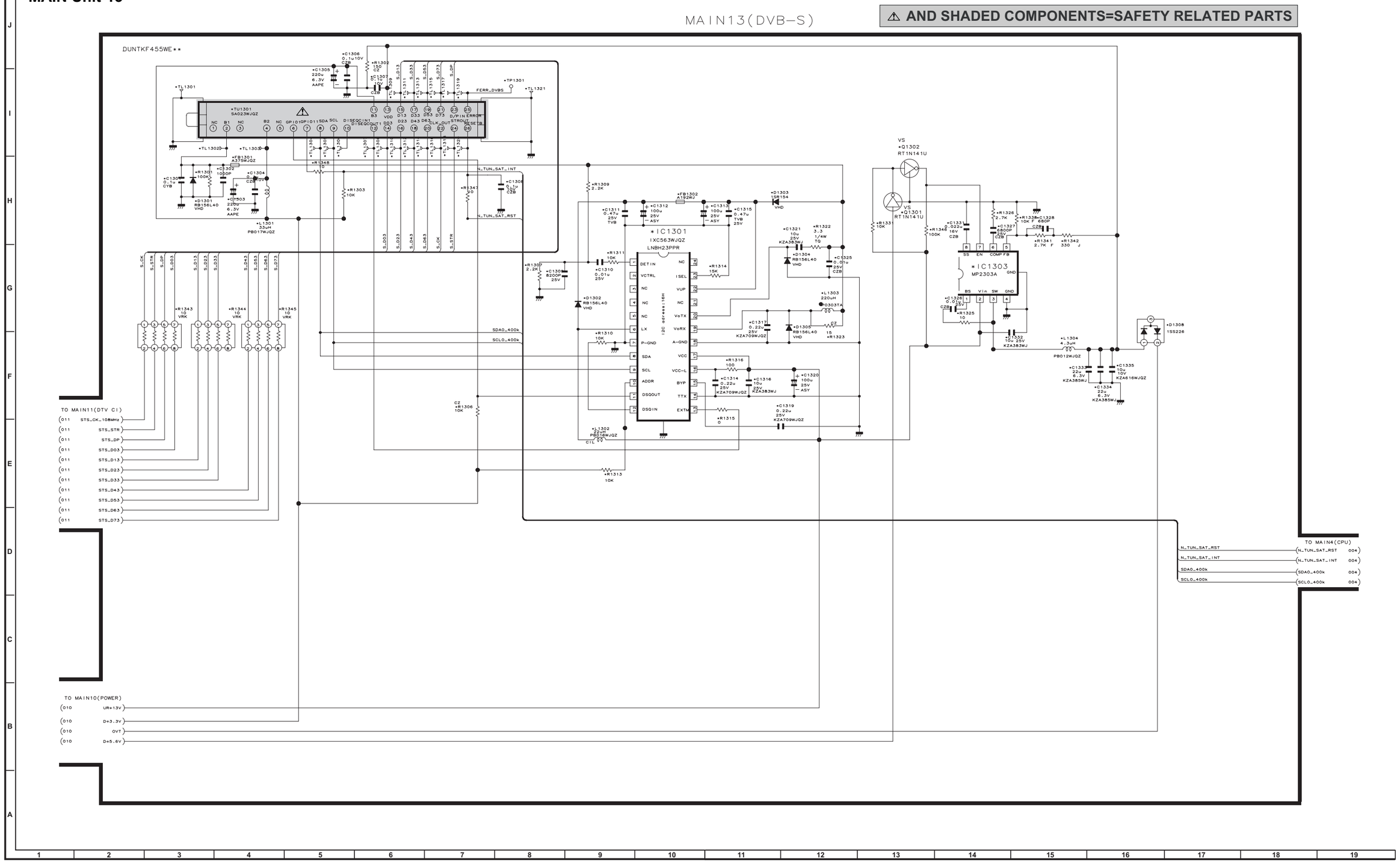

R/C, LED Unit

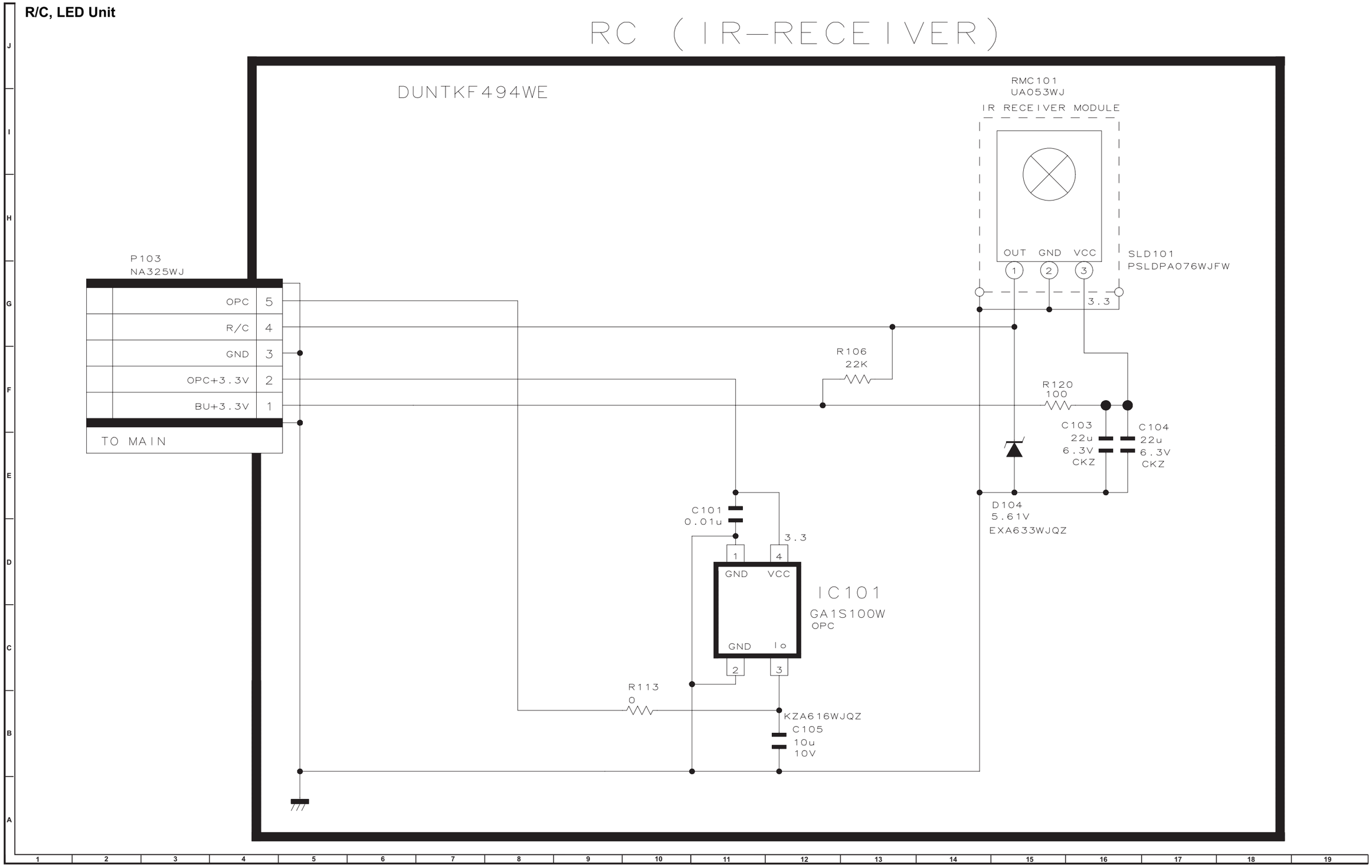
RC (IR-RECEIVER)
DUNTKF494WE
RMC101
UA053WJ
IR RECEIVER MODULE
OUT GND VCC
SLD101
PSLDPA076WJFW
3.3
P103
NA325WJ
OPC 5
R/C 4
GND 3
OPC+3.3V 2
BU+3.3V 1
TO MAIN
R106
22K
R120
100
C103
22u
6.3V
CKZ
C104
22u
6.3V
CKZ
D104
5.61V
EXA633WJQZ
C101
0.01u
3.3
GND VCC
IC101
GA1S100W
OPC
GND Io
R113
0
KZA616WJQZ
C105
10u
10V

ICON Unit

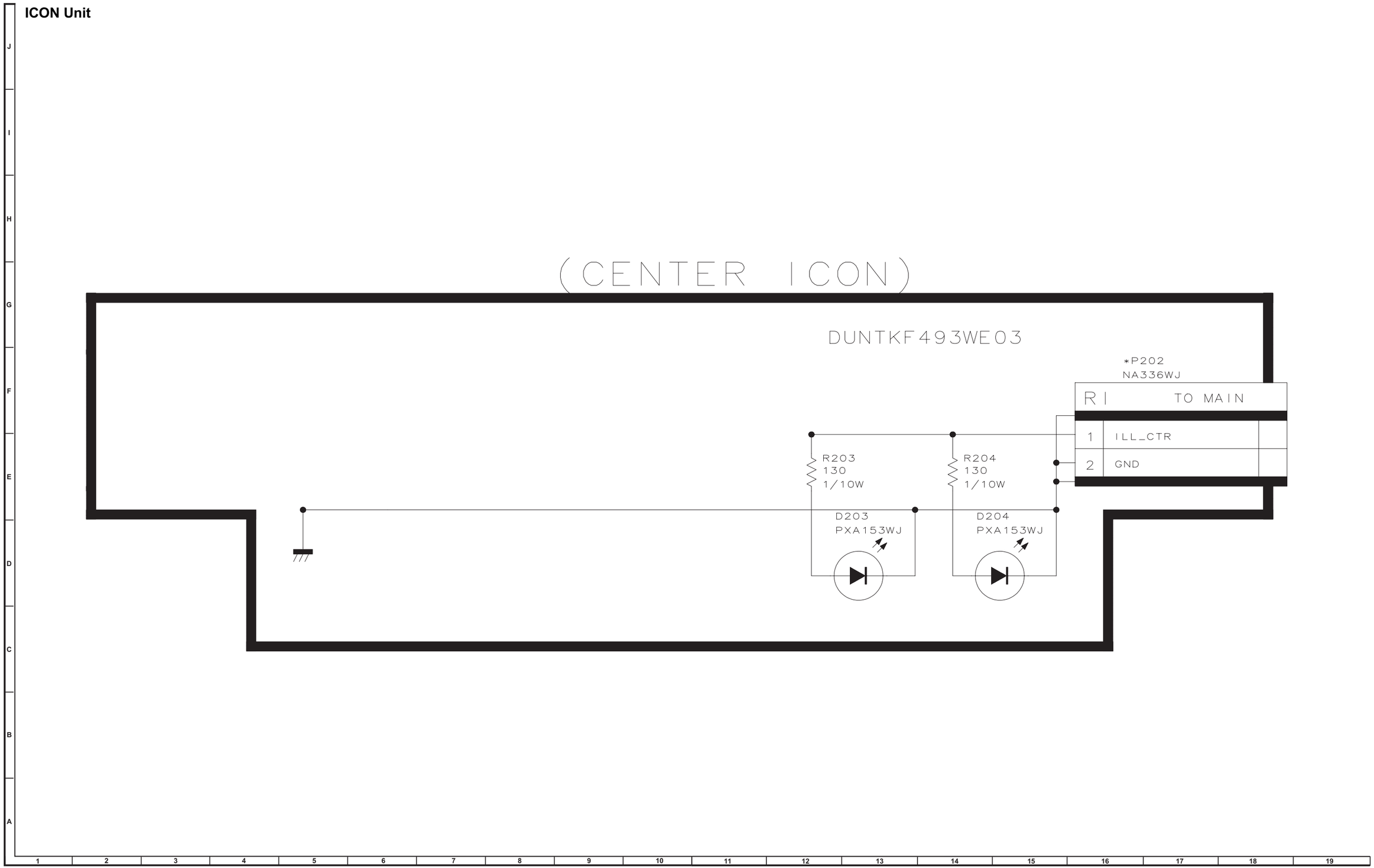
(CENTER ICON)
DUNTKF493WE03
*P202
NA336WJ
R1
TO MAIN
1
ILL_CTR
2
GND
R203
130
1/10W
R204
130
1/10W
D203
PXA153WJ
D204
PXA153WJ

LOGO Unit

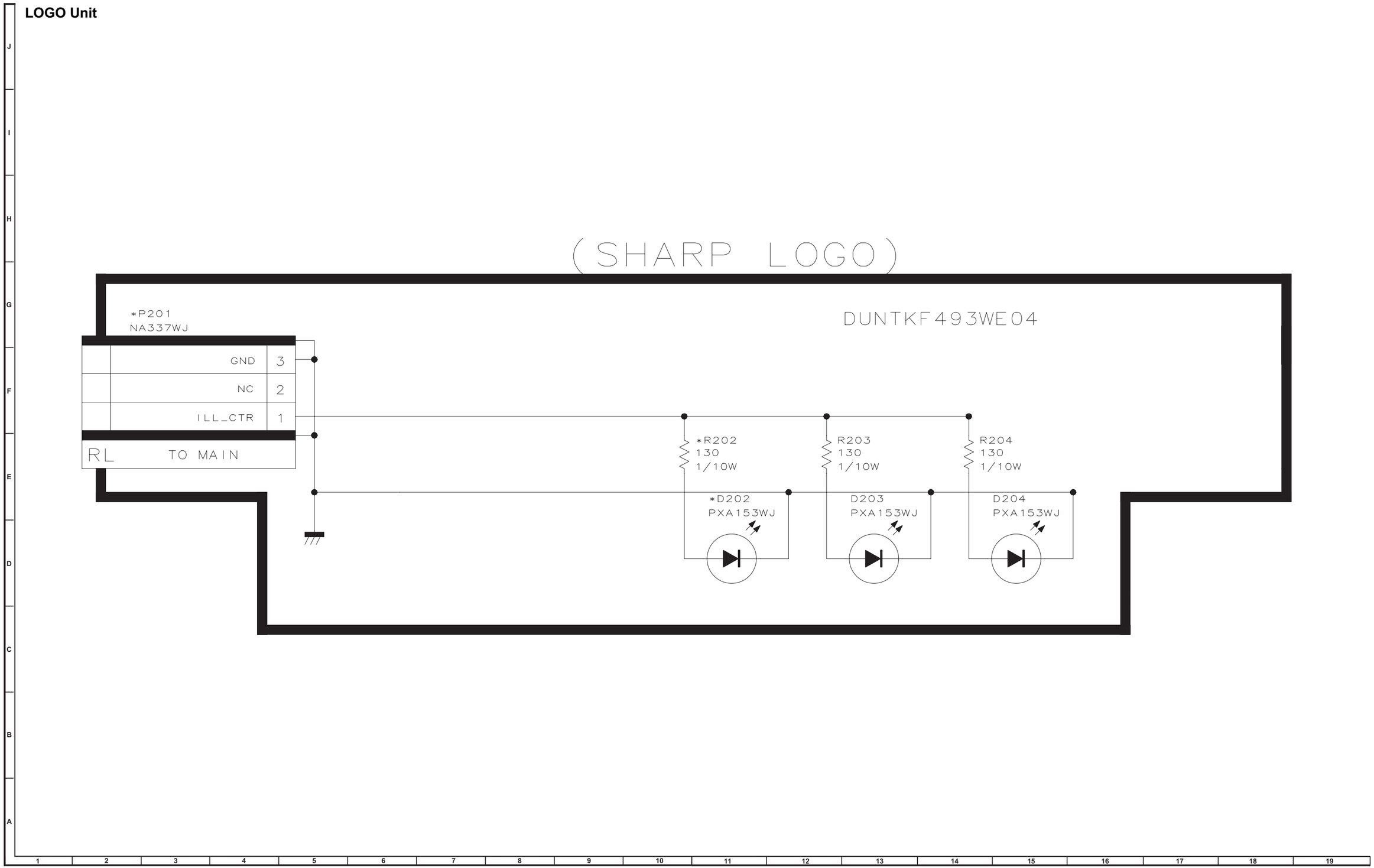
(SHARP LOGO)
DUNTKF493WE04
*P201
NA337WJ
GND 3
NC 2
ILL_CTR 1
RL TO MAIN
*R202
130
1/10W
R203
130
1/10W
R204
130
1/10W
*D202
PXA153WJ
D203
PXA153WJ
D204
PXA153WJ

SHARP PARTS GUIDE

No. S90L560LE822E

LCD COLOUR TELEVISION

MODELS LC-60LE822E LC-60LE822ERU

CONTENTS

[1] PRINTED WIRING BOARD ASSEMBLIES

[2] DKEYDF455FM07 (MAIN Unit)

[3] DUNTKF494FM02 (R/C, LED Unit)

[4] DUNTKF493FM03 (ICON Unit)

[5] DUNTKF493FM04 (LOGO Unit)

Parts marked with "⚠" are important for maintaining the safety of the set. Be sure to replace these parts with specified ones for maintaining the safety and performance of the set.

SHARP CORPORATION

This document has been published to be used for after sales service only.
The contents are subject to change without notice.

NO.	PARTS CODE	PRICE RANK	NEW MARK	PART DELIVERY	DESCRIPTION
[1] PRINTED WIRING BOARD ASSEMBLIES					
N	DKEYDF455FM07	CK	N	S	MAIN Unit
N	DUNTKF494FM02	AP	N	S	R/C, LED Unit
N	DUNTKF493FM03	AP	N	S	ICON Unit
N	DUNTKF493FM04	AQ	N	S	LOGO Unit
N	RUNTKA761WJQZ		N	S	TOUCH SENSOR Key Unit
N	RUNTKA729WJQZ		N	S	POWER/LED CONTROL Unit
N	RUNTK4512TPZA	BV	N	X	LCD CONTROL Unit
[2] DKEYDF455FM07 (MAIN Unit)					
C501	VCKYCZ1HB221KY	AA		J	Capacitor 220p 50V Ceramic
C502	VCKYCZ1HB221KY	AA		J	Capacitor 220p 50V Ceramic
C503	VCCCCZ1HH101JY	AB		J	Capacitor 100p 50V Ceramic
C508	VCKYCZ1HB102KY	AB		J	Capacitor 1000p 50V Ceramic
C510	VCKYCZ1HB102KY	AB		J	Capacitor 1000p 50V Ceramic
C511	VCKYCZ1HB221KY	AA		J	Capacitor 220p 50V Ceramic
C521	VCKYCZ1AB104KY	AB		J	Capacitor 0.1 10V Ceramic
C522	VCKYCZ1HB331KY	AA		J	Capacitor 330p 50V Ceramic
C523	VCKYCZ1HB331KY	AA		J	Capacitor 330p 50V Ceramic
C530	VCKYCZ1HB471KY	AB		J	Capacitor 470p 50V Ceramic
C531	VCKYCZ1HB471KY	AB		J	Capacitor 470p 50V Ceramic
C532	VCCCCZ1HH101JY	AB		J	Capacitor 100p 50V Ceramic
C533	VCCCCZ1HH101JY	AB		J	Capacitor 100p 50V Ceramic
C538	VCKYCZ1HB102KY	AB		J	Capacitor 1000p 50V Ceramic
C539	VCKYCZ1HB102KY	AB		J	Capacitor 1000p 50V Ceramic
C542	RC-KZA616WJQZY	AB		J	Capacitor 10 10V Ceramic
C543	RC-KZA616WJQZY	AB		J	Capacitor 10 10V Ceramic
C551	VCEASY1CN477MY	AD		J	Capacitor 470 16V Electrolytic
C554	VCKYCZ1HB102KY	AB		J	Capacitor 1000p 50V Ceramic
C555	VCKYCZ1AB104KY	AB		J	Capacitor 0.1 10V Ceramic
C558	VCKYCZ1EB103KY	AA		J	Capacitor 0.01 25V Ceramic
C559	VCKYCZ1EB103KY	AA		J	Capacitor 0.01 25V Ceramic
C560	VCKYCZ1HB102KY	AB		J	Capacitor 1000p 50V Ceramic
C562	RC-KZA616WJQZY	AB		J	Capacitor 10 10V Ceramic
C565	VCKYCZ1EB103KY	AA		J	Capacitor 0.01 25V Ceramic
C566	VCKYCZ1EB103KY	AA		J	Capacitor 0.01 25V Ceramic
C567	VCEASY1EN107MY	AC		J	Capacitor 100 25V Electrolytic
C568	VCEASY1EN107MY	AC		J	Capacitor 100 25V Electrolytic
C573	VCKYCZ1AB104KY	AB		J	Capacitor 0.1 10V Ceramic
C577	RC-KZA616WJQZY	AB		J	Capacitor 10 10V Ceramic
C578	VCKYCZ1AB104KY	AB		J	Capacitor 0.1 10V Ceramic
C579	VCKYCZ1AB104KY	AB		J	Capacitor 0.1 10V Ceramic
C580	VCKYCZ1AB104KY	AB		J	Capacitor 0.1 10V Ceramic
C581	RC-KZA616WJQZY	AB		J	Capacitor 10 10V Ceramic
C582	VCKYCY1AB105KY	AB		J	Capacitor 1 10V Ceramic
C584	VCKYCZ1AB104KY	AB		J	Capacitor 0.1 10V Ceramic
C586	VCKYCZ1AB104KY	AB		J	Capacitor 0.1 10V Ceramic
C588	VCCCCZ1HH470JY	AB		J	Capacitor 47p 50V Ceramic
C592	VCKYCZ1HB471KY	AB		J	Capacitor 470p 50V Ceramic
C603	VCKYCY1AB105KY	AB		J	Capacitor 1 10V Ceramic
C604	VCKYCY1AB105KY	AB		J	Capacitor 1 10V Ceramic
C1103	RC-KZA616WJQZY	AB		J	Capacitor 10 10V Ceramic
C1104	VCKYCZ1AB104KY	AB		J	Capacitor 0.1 10V Ceramic
C1105	VCKYCZ1HB102KY	AB		J	Capacitor 1000p 50V Ceramic
C1107	VCKYCZ1AB104KY	AB		J	Capacitor 0.1 10V Ceramic
C1109	VCKYCZ1EB103KY	AA		J	Capacitor 0.01 25V Ceramic
C1110	VCKYCZ1EB103KY	AA		J	Capacitor 0.01 25V Ceramic
C1111	VCKYCZ1AB104KY	AB		J	Capacitor 0.1 10V Ceramic
C1113	VCEASY1CN477MY	AD		J	Capacitor 470 16V Electrolytic
C1115	VCKYCZ1AB104KY	AB		J	Capacitor 0.1 10V Ceramic
C1116	RC-KZA616WJQZY	AB		J	Capacitor 10 10V Ceramic
C1123	VCKYCZ1EB103KY	AA		J	Capacitor 0.01 25V Ceramic
C1124	VCKYCZ1EB103KY	AA		J	Capacitor 0.01 25V Ceramic
C1125	VCKYCZ1AB104KY	AB		J	Capacitor 0.1 10V Ceramic
C1126	VCKYCZ1AB104KY	AB		J	Capacitor 0.1 10V Ceramic
C1127	RC-KZA616WJQZY	AB		J	Capacitor 10 10V Ceramic
C1128	RC-KZA616WJQZY	AB		J	Capacitor 10 10V Ceramic
C1129	VCKYCY1AB105KY	AB		J	Capacitor 1 10V Ceramic
C1130	VCKYCY1AB105KY	AB		J	Capacitor 1 10V Ceramic
C1131	RC-KZA616WJQZY	AB		J	Capacitor 10 10V Ceramic
C1133	VCKYCZ1AB104KY	AB		J	Capacitor 0.1 10V Ceramic
C1134	VCKYCZ1EB103KY	AA		J	Capacitor 0.01 25V Ceramic
C1135	VCKYCZ1EB103KY	AA		J	Capacitor 0.01 25V Ceramic
C1136	VCKYCZ1EB103KY	AA		J	Capacitor 0.01 25V Ceramic
C1137	VCKYCZ1AB104KY	AB		J	Capacitor 0.1 10V Ceramic
C1138	VCKYCZ1AB104KY	AB		J	Capacitor 0.1 10V Ceramic
C1139	VCKYCZ1AB104KY	AB		J	Capacitor 0.1 10V Ceramic
C1141	RC-KZA510WJPZY	AB		J	Capacitor 10 16V Ceramic
C1142	VCKYCZ1AB104KY	AB		J	Capacitor 0.1 10V Ceramic
C1143	VCKYCZ1AB104KY	AB		J	Capacitor 0.1 10V Ceramic
C1144	VCKYCZ1AB104KY	AB		J	Capacitor 0.1 10V Ceramic
C1145	RC-KZA616WJQZY	AB		J	Capacitor 10 10V Ceramic
C1146	VCKYCZ1AB104KY	AB		J	Capacitor 0.1 10V Ceramic
C1147	VCCCCZ1HH150JY	AB		J	Capacitor 15p 50V Ceramic
C1148	VCCCCZ1HH150JY	AB		J	Capacitor 15p 50V Ceramic
C1149	VCKYCZ1EB103KY	AA		J	Capacitor 0.01 25V Ceramic

NO.	PARTS CODE	PRICE RANK	NEW MARK	PART DELIVERY	DESCRIPTION
[2] DKEYDF455FM07 (MAIN Unit)					
C1151	VCKYCZ1AB104KY	AB		J	Capacitor 0.1 10V Ceramic
C1152	VCKYCZ1AB104KY	AB		J	Capacitor 0.1 10V Ceramic
C1153	VCKYCZ1EB103KY	AA		J	Capacitor 0.01 25V Ceramic
C1154	RC-KZA616WJQZY	AB		J	Capacitor 10 10V Ceramic
C1157	VCKYCZ1EB103KY	AA		J	Capacitor 0.01 25V Ceramic
C1158	VCKYCZ1EB103KY	AA		J	Capacitor 0.01 25V Ceramic
C1161	VCKYCZ1AB104KY	AB		J	Capacitor 0.1 10V Ceramic
C1173	RC-KZA616WJQZY	AB		J	Capacitor 10 10V Ceramic
C1301	VCKYCY1EB104KY	AB		J	Capacitor 0.1 25V Ceramic
C1302	VCKYCZ1HB102KY	AB		J	Capacitor 1000p 50V Ceramic
C1303	VCAAPE0JJ227MY	AE		J	Capacitor 220 6.3V Electrolytic
C1304	VCKYCZ1AB104KY	AB		J	Capacitor 0.1 10V Ceramic
C1305	VCAAPE0JJ227MY	AE		J	Capacitor 220 6.3V Electrolytic
C1306	VCKYCZ1AB104KY	AB		J	Capacitor 0.1 10V Ceramic
C1307	VCKYCZ1AB104KY	AB		J	Capacitor 0.1 10V Ceramic
C1308	VCKYCZ1AB104KY	AB		J	Capacitor 0.1 10V Ceramic
C1309	VCKYCZ1EB822KY	AA		J	Capacitor 8200p 25V Ceramic
C1310	VCKYCZ1EB103KY	AA		J	Capacitor 0.01 25V Ceramic
C1311	VCKYTV1EB474KY	AC		J	Capacitor 0.47 25V Ceramic
C1312	VCEASY1EN107MY	AC		J	Capacitor 100 25V Electrolytic
C1313	VCEASY1EN107MY	AC		J	Capacitor 100 25V Electrolytic
C1314	RC-KZA709WJQZY	AA		J	Capacitor 0.22 25V Ceramic
C1315	VCKYTV1EB474KY	AC		J	Capacitor 0.47 25V Ceramic
C1316	RC-KZA383WJZZY	AC		J	Capacitor 10 25V Ceramic
C1317	RC-KZA709WJQZY	AA		J	Capacitor 0.22 25V Ceramic
C1319	RC-KZA709WJQZY	AA		J	Capacitor 0.22 25V Ceramic
C1320	VCEASY1EN107MY	AC		J	Capacitor 100 25V Electrolytic
C1321	RC-KZA383WJZZY	AC		J	Capacitor 10 25V Ceramic
C1325	VCKYCZ1EB103KY	AA		J	Capacitor 0.01 25V Ceramic
C1326	VCKYCZ1EB103KY	AA		J	Capacitor 0.01 25V Ceramic
C1327	VCKYCZ1EB682KY	AB		J	Capacitor 6800p 25V Ceramic
C1328	VCKYCZ1HB681KY	AB		J	Capacitor 680p 50V Ceramic
C1331	VCKYCZ1CB223KY	AC		J	Capacitor 0.022 16V Ceramic
C1332	RC-KZA383WJZZY	AC		J	Capacitor 10 25V Ceramic
C1333	RC-KZA385WJZZY	AD		J	Capacitor 22 6.3V Ceramic
C1334	RC-KZA385WJZZY	AD		J	Capacitor 22 6.3V Ceramic
C1335	RC-KZA616WJQZY	AB		J	Capacitor 10 10V Ceramic
C1501	VCKYCZ1AB104KY	AB		J	Capacitor 0.1 10V Ceramic
C1502	VCKYCZ1AB104KY	AB		J	Capacitor 0.1 10V Ceramic
C1503	RC-KZA616WJQZY	AB		J	Capacitor 10 10V Ceramic
C1510	RC-KZA616WJQZY	AB		J	Capacitor 10 10V Ceramic
C1511	VCKYCZ1AB104KY	AB		J	Capacitor 0.1 10V Ceramic
C1512	VCKYCZ1HB102KY	AB		J	Capacitor 1000p 50V Ceramic
C1514	VCKYCY1AB105KY	AB		J	Capacitor 1 10V Ceramic
C1515	VCKYCZ1AB104KY	AB		J	Capacitor 0.1 10V Ceramic
C1516	VCKYCZ1AB104KY	AB		J	Capacitor 0.1 10V Ceramic
C1517	VCKYCZ1HB102KY	AB		J	Capacitor 1000p 50V Ceramic
C1518	VCKYCZ1HB102KY	AB		J	Capacitor 1000p 50V Ceramic
C1519	VCKYCY1AB105KY	AB		J	Capacitor 1 10V Ceramic
C1520	VCKYCY1AB105KY	AB		J	Capacitor 1 10V Ceramic
C1522	RC-KZA616WJQZY	AB		J	Capacitor 10 10V Ceramic
C1523	RC-KZA616WJQZY	AB		J	Capacitor 10 10V Ceramic
C1531	VCKYCY1AB105KY	AB		J	Capacitor 1 10V Ceramic
C1535	VCKYCY1AB105KY	AB		J	Capacitor 1 10V Ceramic
C2002	VCKYCZ1HB152KY	AB		J	Capacitor 1500p 50V Ceramic
C2003	VCKYCZ1AB104KY	AB		J	Capacitor 0.1 10V Ceramic
C2004	VCKYCZ1HB102KY	AB		J	Capacitor 1000p 50V Ceramic
C2005	VCKYCZ1HB102KY	AB		J	Capacitor 1000p 50V Ceramic
C2006	VCKYCZ1AB104KY	AB		J	Capacitor 0.1 10V Ceramic
C2007	VCKYCZ1AB104KY	AB		J	Capacitor 0.1 10V Ceramic
C2008	VCKYCZ1AB104KY	AB		J	Capacitor 0.1 10V Ceramic
C2009	VCCCCZ1HH120JY	AB		J	Capacitor 12p 50V Ceramic
C2010	VCKYCZ1AB104KY	AB		J	Capacitor 0.1 10V Ceramic
C2011	VCCCCZ1HH150JY	AB		J	Capacitor 15p 50V Ceramic
C2012	VCKYCZ1AB104KY	AB		J	Capacitor 0.1 10V Ceramic
C2016	VCKYCZ1AB104KY	AB		J	Capacitor 0.1 10V Ceramic
C2020	VCKYCZ1HB102KY	AB		J	Capacitor 1000p 50V Ceramic
C2021	VCKYCZ1AB104KY	AB		J	Capacitor 0.1 10V Ceramic
C2022	RC-KZA616WJQZY	AB		J	Capacitor 10 10V Ceramic
C2024	VCKYCZ1AB104KY	AB		J	Capacitor 0.1 10V Ceramic
C2026	VCKYCZ1AB104KY	AB		J	Capacitor 0.1 10V Ceramic
C2027	VCCCCZ1HH101JY	AB		J	Capacitor 100p 50V Ceramic
C2028	VCCCCZ1HH101JY	AB		J	Capacitor 100p 50V Ceramic
C2029	VCCCCZ1HH101JY	AB		J	Capacitor 100p 50V Ceramic
C2602	VCKYCZ1AB104KY	AB		J	Capacitor 0.1 10V Ceramic
C2701	VCCCCZ1HH120GY	AA		J	Capacitor 12p 50V Ceramic
C2702	VCCCCY1HH120GY		N	S	Capacitor 12p 50V Ceramic
C2703	VCKYCZ1AB104KY	AB		J	Capacitor 0.1 10V Ceramic
C2704	VCKYCZ1AB104KY	AB		J	Capacitor 0.1 10V Ceramic
C2705	VCKYCZ1AB104KY	AB		J	Capacitor 0.1 10V Ceramic
C2706	VCKYCZ1AB104KY	AB		J	Capacitor 0.1 10V Ceramic
C2707	VCKYCZ1AB104KY	AB		J	Capacitor 0.1 10V Ceramic
C2709	VCKYCZ1AB104KY	AB		J	Capacitor 0.1 10V Ceramic
C2710	VCKYCZ1AB104KY	AB		J	Capacitor 0.1 10V Ceramic
C2711	VCKYCY1AB105KY	AB		J	Capacitor 1 10V Ceramic

NO.	PARTS CODE	PRICE RANK	NEW MARK	PART DELIVERY	DESCRIPTION
[2] DKEYDF455FM07 (MAIN Unit)					
C2713	VCEASY1EN107MY	AC		J	Capacitor 100 25V Electrolytic
C2714	VCKYCZ1AB104KY	AB		J	Capacitor 0.1 10V Ceramic
C2715	VCKYCZ1AB104KY	AB		J	Capacitor 0.1 10V Ceramic
C2716	VCKYCY1AB105KY	AB		J	Capacitor 1 10V Ceramic
C2717	VCEASY1EN107MY	AC		J	Capacitor 100 25V Electrolytic
C2718	RC-KZA114WJZZY	AB		J	Capacitor 1 25V Ceramic
C2719	RC-KZA114WJZZY	AB		J	Capacitor 1 25V Ceramic
C2720	RC-KZA114WJZZY	AB		J	Capacitor 1 25V Ceramic
C2721	RC-KZA114WJZZY	AB		J	Capacitor 1 25V Ceramic
C2722	VCKYCY1EB104KY	AB		J	Capacitor 0.1 25V Ceramic
C2723	VCKYCY1EB104KY	AB		J	Capacitor 0.1 25V Ceramic
C2724	VCKYCY1EB104KY	AB		J	Capacitor 0.1 25V Ceramic
C2725	VCKYCY1EB104KY	AB		J	Capacitor 0.1 25V Ceramic
C2726	RC-KZA114WJZZY	AB		J	Capacitor 1 25V Ceramic
C2727	RC-KZA709WJQZY	AA		J	Capacitor 0.22 25V Ceramic
C2728	RC-KZA114WJZZY	AB		J	Capacitor 1 25V Ceramic
C2729	RC-KZA114WJZZY	AB		J	Capacitor 1 25V Ceramic
C2730	RC-KZA709WJQZY	AA		J	Capacitor 0.22 25V Ceramic
C2731	RC-KZA114WJZZY	AB		J	Capacitor 1 25V Ceramic
C2732	VCKYCZ1HB102KY	AB		J	Capacitor 1000p 50V Ceramic
C2733	VCKYCZ1HB102KY	AB		J	Capacitor 1000p 50V Ceramic
C2736	RC-KZA709WJQZY	AA		J	Capacitor 0.22 25V Ceramic
C2737	RC-KZA709WJQZY	AA		J	Capacitor 0.22 25V Ceramic
C2740	VCKYTV1EB334KY	AB		J	Capacitor 0.33 25V Ceramic
C2743	VCKYCZ1EF104ZY	AA		J	Capacitor 0.1 25V Ceramic
C2744	VCKYCZ1EF104ZY	AA		J	Capacitor 0.1 25V Ceramic
C2745	VCKYCZ1EF104ZY	AA		J	Capacitor 0.1 25V Ceramic
C2746	VCKYCZ1EF104ZY	AA		J	Capacitor 0.1 25V Ceramic
C2750	VCKYCZ1EF104ZY	AA		J	Capacitor 0.1 25V Ceramic
C2751	VCKYCZ1EF104ZY	AA		J	Capacitor 0.1 25V Ceramic
C2753	VCKYCZ1AB104KY	AB		J	Capacitor 0.1 10V Ceramic
C3302	RC-KZA616WJQZY	AB		J	Capacitor 10 10V Ceramic
C3303	VCKYCZ1HB102KY	AB		J	Capacitor 1000p 50V Ceramic
C3304	VCKYCZ1AB104KY	AB		J	Capacitor 0.1 10V Ceramic
C3306	RC-KZA616WJQZY	AB		J	Capacitor 10 10V Ceramic
C3309	VCKYCZ1AB104KY	AB		J	Capacitor 0.1 10V Ceramic
C3311	RC-KZA616WJQZY	AB		J	Capacitor 10 10V Ceramic
C3312	VCKYCZ1AB104KY	AB		J	Capacitor 0.1 10V Ceramic
C3315	RC-KZA616WJQZY	AB		J	Capacitor 10 10V Ceramic
C3317	RC-KZA616WJQZY	AB		J	Capacitor 10 10V Ceramic
C3318	VCKYCZ1AB104KY	AB		J	Capacitor 0.1 10V Ceramic
C3319	VCKYCZ1HB102KY	AB		J	Capacitor 1000p 50V Ceramic
C3320	VCKYCZ1AB473KY	AB		J	Capacitor 0.047 10V Ceramic
C3321	RC-KZA616WJQZY	AB		J	Capacitor 10 10V Ceramic
C3322	VCKYCZ1EB103KY	AA		J	Capacitor 0.01 25V Ceramic
C3323	VCKYCZ1AB104KY	AB		J	Capacitor 0.1 10V Ceramic
C3324	VCKYCZ1EB103KY	AA		J	Capacitor 0.01 25V Ceramic
C3325	VCKYCZ1AB104KY	AB		J	Capacitor 0.1 10V Ceramic
C3326	RC-KZA616WJQZY	AB		J	Capacitor 10 10V Ceramic
C3327	VCKYCZ1HB102KY	AB		J	Capacitor 1000p 50V Ceramic
C3329	VCKYCZ1AB104KY	AB		J	Capacitor 0.1 10V Ceramic
C3331	RC-KZA616WJQZY	AB		J	Capacitor 10 10V Ceramic
C3332	RC-KZA616WJQZY	AB		J	Capacitor 10 10V Ceramic
C3333	VCKYCZ1AB104KY	AB		J	Capacitor 0.1 10V Ceramic
C3334	VCKYCZ1AB104KY	AB		J	Capacitor 0.1 10V Ceramic
C3335	RC-KZA616WJQZY	AB		J	Capacitor 10 10V Ceramic
C3336	VCKYCZ1AB104KY	AB		J	Capacitor 0.1 10V Ceramic
C3337	VCKYCZ1AB104KY	AB		J	Capacitor 0.1 10V Ceramic
C3338	RC-KZA616WJQZY	AB		J	Capacitor 10 10V Ceramic
C3340	VCKYCZ1AB104KY	AB		J	Capacitor 0.1 10V Ceramic
C3342	VCKYCZ1AB104KY	AB		J	Capacitor 0.1 10V Ceramic
C3343	VCKYCZ1HB102KY	AB		J	Capacitor 1000p 50V Ceramic
C3344	VCKYCZ1AB104KY	AB		J	Capacitor 0.1 10V Ceramic
C3345	VCKYCZ1AB104KY	AB		J	Capacitor 0.1 10V Ceramic
C3346	RC-KZA616WJQZY	AB		J	Capacitor 10 10V Ceramic
C3347	RC-KZA616WJQZY	AB		J	Capacitor 10 10V Ceramic
C3348	RC-KZA616WJQZY	AB		J	Capacitor 10 10V Ceramic
C3349	VCKYCZ1CB223KY	AC		J	Capacitor 0.022 16V Ceramic
C3350	VCKYCZ1HB102KY	AB		J	Capacitor 1000p 50V Ceramic
C3351	RC-KZA510WJPZY	AB		J	Capacitor 10 16V Ceramic
C3352	VCKYCZ1AB104KY	AB		J	Capacitor 0.1 10V Ceramic
C3353	VCKYCZ1AB104KY	AB		J	Capacitor 0.1 10V Ceramic
C3355	RC-KZA616WJQZY	AB		J	Capacitor 10 10V Ceramic
C3356	VCKYCZ1AB104KY	AB		J	Capacitor 0.1 10V Ceramic
C3357	VCKYCZ1AB104KY	AB		J	Capacitor 0.1 10V Ceramic
C3358	VCKYCZ1CB223KY	AC		J	Capacitor 0.022 16V Ceramic
C3359	VCKYCZ1EB103KY	AA		J	Capacitor 0.01 25V Ceramic
C3360	VCKYCZ1AB104KY	AB		J	Capacitor 0.1 10V Ceramic
C3361	RC-KZA616WJQZY	AB		J	Capacitor 10 10V Ceramic
C3362	VCKYCZ1AB104KY	AB		J	Capacitor 0.1 10V Ceramic
C3363	RC-KZA616WJQZY	AB		J	Capacitor 10 10V Ceramic
C3364	VCKYCY1AB105KY	AB		J	Capacitor 1 10V Ceramic
C3365	VCKYCZ1AB104KY	AB		J	Capacitor 0.1 10V Ceramic
C3366	RC-KZA616WJQZY	AB		J	Capacitor 10 10V Ceramic
C3367	VCKYCZ1AB104KY	AB		J	Capacitor 0.1 10V Ceramic

NO.	PARTS CODE	PRICE RANK	NEW MARK	PART DELIVERY	DESCRIPTION
[2] DKEYDF455FM07 (MAIN Unit)					
C3370	VCCCCZ1HH120JY	AB		J	Capacitor 12p 50V Ceramic
C3371	VCCCCZ1HH100DY	AB		J	Capacitor 10p 50V Ceramic
C3376	VCKYCZ1EB103KY	AA		J	Capacitor 0.01 25V Ceramic
C3377	VCKYCZ1EB103KY	AA		J	Capacitor 0.01 25V Ceramic
C3378	VCKYCZ1HB472KY	AA		J	Capacitor 4700p 50V Ceramic
C3379	VCKYCZ1EB103KY	AA		J	Capacitor 0.01 25V Ceramic
C3380	VCKYCZ1EB103KY	AA		J	Capacitor 0.01 25V Ceramic
C3381	VCKYCZ1AB473KY	AB		J	Capacitor 0.047 10V Ceramic
C3382	VCKYCZ1AB473KY	AB		J	Capacitor 0.047 10V Ceramic
C3383	VCKYCZ1HB472KY	AA		J	Capacitor 4700p 50V Ceramic
C3384	VCKYCZ1AB473KY	AB		J	Capacitor 0.047 10V Ceramic
C3385	VCKYCZ1EB103KY	AA		J	Capacitor 0.01 25V Ceramic
C3386	VCKYCZ1EB103KY	AA		J	Capacitor 0.01 25V Ceramic
C3387	VCKYCZ1EB103KY	AA		J	Capacitor 0.01 25V Ceramic
C3388	VCKYCZ1EB103KY	AA		J	Capacitor 0.01 25V Ceramic
C3389	VCKYCZ1EB103KY	AA		J	Capacitor 0.01 25V Ceramic
C3390	VCKYCZ1AB473KY	AB		J	Capacitor 0.047 10V Ceramic
C3395	VCKYCZ1EB103KY	AA		J	Capacitor 0.01 25V Ceramic
C3396	VCKYCZ1EB103KY	AA		J	Capacitor 0.01 25V Ceramic
C3397	VCKYCZ1EB103KY	AA		J	Capacitor 0.01 25V Ceramic
C3398	RC-KZA616WJQZY	AB		J	Capacitor 10 10V Ceramic
C3399	RC-KZA616WJQZY	AB		J	Capacitor 10 10V Ceramic
C3400	RC-KZA616WJQZY	AB		J	Capacitor 10 10V Ceramic
C3401	RC-KZA616WJQZY	AB		J	Capacitor 10 10V Ceramic
C3404	RC-KZA616WJQZY	AB		J	Capacitor 10 10V Ceramic
C3405	RC-KZA616WJQZY	AB		J	Capacitor 10 10V Ceramic
C3408	VCKYCZ1AB473KY	AB		J	Capacitor 0.047 10V Ceramic
C3501	VCKYCZ1AB104KY	AB		J	Capacitor 0.1 10V Ceramic
C3502	VCKYCZ1AB104KY	AB		J	Capacitor 0.1 10V Ceramic
C3503	VCAAPE0JJ107MY	AE		J	Capacitor 100 6.3V Electrolytic
C3504	RC-KZA510WJPZY	AB		J	Capacitor 10 16V Ceramic
C3507	VCKYCZ1AB104KY	AB		J	Capacitor 0.1 10V Ceramic
C3512	VCKYCZ1AB104KY	AB		J	Capacitor 0.1 10V Ceramic
C3514	RC-KZA510WJPZY	AB		J	Capacitor 10 16V Ceramic
C3515	RC-KZA510WJPZY	AB		J	Capacitor 10 16V Ceramic
C3517	VCKYCZ1AB104KY	AB		J	Capacitor 0.1 10V Ceramic
C3518	VCKYCZ1AB104KY	AB		J	Capacitor 0.1 10V Ceramic
C3524	RC-KZA510WJPZY	AB		J	Capacitor 10 16V Ceramic
C4401	RC-KZA616WJQZY	AB		J	Capacitor 10 10V Ceramic
C4402	VCKYCZ1AB104KY	AB		J	Capacitor 0.1 10V Ceramic
C4403	VCKYCZ1AB104KY	AB		J	Capacitor 0.1 10V Ceramic
C4404	VCKYCZ1AB104KY	AB		J	Capacitor 0.1 10V Ceramic
C4405	VCKYCZ1AB104KY	AB		J	Capacitor 0.1 10V Ceramic
C4406	VCKYCZ1AB104KY	AB		J	Capacitor 0.1 10V Ceramic
C4407	VCKYCZ1AB104KY	AB		J	Capacitor 0.1 10V Ceramic
C4408	VCKYCZ1AB104KY	AB		J	Capacitor 0.1 10V Ceramic
C4409	VCKYCZ1AB104KY	AB		J	Capacitor 0.1 10V Ceramic
C4412	VCKYCZ1AB104KY	AB		J	Capacitor 0.1 10V Ceramic
C4413	RC-KZA616WJQZY	AB		J	Capacitor 10 10V Ceramic
C4414	VCAAPD1AJ686MY	AE		J	Capacitor 68 10V Electrolytic
C4415	RC-KZA616WJQZY	AB		J	Capacitor 10 10V Ceramic
C4416	VCKYCZ1AB104KY	AB		J	Capacitor 0.1 10V Ceramic
C4417	VCKYCZ1AB104KY	AB		J	Capacitor 0.1 10V Ceramic
C4418	RC-KZA616WJQZY	AB		J	Capacitor 10 10V Ceramic
C4419	VCKYCZ1AB104KY	AB		J	Capacitor 0.1 10V Ceramic
C4420	RC-KZA616WJQZY	AB		J	Capacitor 10 10V Ceramic
C4421	VCKYCZ1AB104KY	AB		J	Capacitor 0.1 10V Ceramic
C4422	VCKYCZ1AB104KY	AB		J	Capacitor 0.1 10V Ceramic
C4423	VCKYCZ1AB104KY	AB		J	Capacitor 0.1 10V Ceramic
C4424	VCCCCZ1HH8R0DY	AA		J	Capacitor 80p 50V Ceramic
C4425	VCCCCZ1HH100DY	AB		J	Capacitor 10p 50V Ceramic
C4426	VCKYCZ1AB104KY	AB		J	Capacitor 0.1 10V Ceramic
C4427	VCKYCZ1AB104KY	AB		J	Capacitor 0.1 10V Ceramic
C4430	VCKYCZ1AB104KY	AB		J	Capacitor 0.1 10V Ceramic
C4431	RC-KZA616WJQZY	AB		J	Capacitor 10 10V Ceramic
C4432	VCKYCZ1HB102KY	AB		J	Capacitor 1000p 50V Ceramic
C8455	VCKYCZ1AB104KY	AB		J	Capacitor 0.1 10V Ceramic
C8456	VCKYCZ1AB104KY	AB		J	Capacitor 0.1 10V Ceramic
C8457	VCKYCZ1AB104KY	AB		J	Capacitor 0.1 10V Ceramic
C8458	VCKYCZ1AB104KY	AB		J	Capacitor 0.1 10V Ceramic
C8460	VCKYCZ1AB104KY	AB		J	Capacitor 0.1 10V Ceramic
C8469	VCKYCZ1AB104KY	AB		J	Capacitor 0.1 10V Ceramic
C8470	VCKYCZ1EB103KY	AA		J	Capacitor 0.01 25V Ceramic
C8471	VCKYCZ1EB103KY	AA		J	Capacitor 0.01 25V Ceramic
C9501	VCKYCZ1AB104KY	AB		J	Capacitor 0.1 10V Ceramic
C9503	RC-KZA523WJQZY	AD		J	Capacitor 1000p 50V Ceramic
C9504	RC-KZA616WJQZY	AB		J	Capacitor 10 10V Ceramic
C9505	VCKYCZ1AB104KY	AB		J	Capacitor 0.1 10V Ceramic
C9506	VCCCCZ1HH150GY	AA		J	Capacitor 15p 50V Ceramic
C9507	VCKYCZ1AB104KY	AB		J	Capacitor 0.1 10V Ceramic
C9508	VCCCCZ1HH150GY	AA		J	Capacitor 15p 50V Ceramic
C9509	VCCCCZ1HH101JY	AB		J	Capacitor 100p 50V Ceramic
C9510	VCKYCZ1AB104KY	AB		J	Capacitor 0.1 10V Ceramic
C9511	RC-KZA616WJQZY	AB		J	Capacitor 10 10V Ceramic
C9512	VCKYCZ1AB104KY	AB		J	Capacitor 0.1 10V Ceramic

NO.	PARTS CODE	PRICE RANK	NEW MARK	PART DELIVERY	DESCRIPTION
[2] DKEYDF455FM07 (MAIN Unit)					
C9513	VCKYCZ1AB104KY	AB		J	Capacitor 0.1 10V Ceramic
C9514	VCKYCZ1AB104KY	AB		J	Capacitor 0.1 10V Ceramic
C9601	VCKYCZ1HB222KY	AB		J	Capacitor 2200p 50V Ceramic
C9602	VCKYCY1AB105KY	AB		J	Capacitor 1 10V Ceramic
C9604	VCKYCY1AB105KY	AB		J	Capacitor 1 10V Ceramic
C9607	RC-KZA385WJZZY	AD		J	Capacitor 22 6.3V Ceramic
C9608	VCKYCY1AB105KY	AB		J	Capacitor 1 10V Ceramic
C9609	RC-KZA385WJZZY	AD		J	Capacitor 22 6.3V Ceramic
C9610	RC-KZA616WJQZY	AB		J	Capacitor 10 10V Ceramic
C9611	RC-KZA616WJQZY	AB		J	Capacitor 10 10V Ceramic
C9612	VCKYCZ1EB682KY	AB		J	Capacitor 6800p 25V Ceramic
C9613	VCKYCZ1AB104KY	AB		J	Capacitor 0.1 10V Ceramic
C9614	RC-KZA616WJQZY	AB		J	Capacitor 10 10V Ceramic
C9615	VCKYCZ1EB103KY	AA		J	Capacitor 0.01 25V Ceramic
C9618	RC-KZA616WJQZY	AB		J	Capacitor 10 10V Ceramic
C9619	VCKYCZ1EB103KY	AA		J	Capacitor 0.01 25V Ceramic
C9620	RC-KZA616WJQZY	AB		J	Capacitor 10 10V Ceramic
C9621	VCKYCZ1HB681KY	AB		J	Capacitor 680p 50V Ceramic
C9622	RC-KZA383WJZZY	AC		J	Capacitor 10 25V Ceramic
C9624	VCKYCZ1EB682KY	AB		J	Capacitor 6800p 25V Ceramic
C9625	VCKYCZ1HB102KY	AB		J	Capacitor 1000p 50V Ceramic
C9626	VCKYCZ1EB103KY	AA		J	Capacitor 0.01 25V Ceramic
C9627	VCKYCZ1EB103KY	AA		J	Capacitor 0.01 25V Ceramic
C9628	VCKYCZ1CB223KY	AC		J	Capacitor 0.022 16V Ceramic
C9629	VCKYCZ1EB103KY	AA		J	Capacitor 0.01 25V Ceramic
C9630	RC-KZA616WJQZY	AB		J	Capacitor 10 10V Ceramic
C9632	VCKYCZ1EB103KY	AA		J	Capacitor 0.01 25V Ceramic
C9633	RC-KZA616WJQZY	AB		J	Capacitor 10 10V Ceramic
C9634	RC-KZA383WJZZY	AC		J	Capacitor 10 25V Ceramic
C9635	RC-KZA616WJQZY	AB		J	Capacitor 10 10V Ceramic
C9640	RC-KZA383WJZZY	AC		J	Capacitor 10 25V Ceramic
C9642	VCKYCZ1EB682KY	AB		J	Capacitor 6800p 25V Ceramic
C9643	VCKYCZ1EB103KY	AA		J	Capacitor 0.01 25V Ceramic
C9644	VCKYCY1AB105KY	AB		J	Capacitor 1 10V Ceramic
C9645	VCKYCZ1EB103KY	AA		J	Capacitor 0.01 25V Ceramic
C9646	RC-KZA510WJPZY	AB		J	Capacitor 10 16V Ceramic
C9649	RC-KZA383WJZZY	AC		J	Capacitor 10 25V Ceramic
C9650	VCKYCY1AB105KY	AB		J	Capacitor 1 10V Ceramic
C9652	RC-KZA114WJZZY	AB		J	Capacitor 1 25V Ceramic
C9655	VCCCCZ1HH101JY	AB		J	Capacitor 100p 50V Ceramic
C9656	VCCCCZ1HH101JY	AB		J	Capacitor 100p 50V Ceramic
C9657	VCCCCZ1HH101JY	AB		J	Capacitor 100p 50V Ceramic
C9658	VCCCCZ1HH101JY	AB		J	Capacitor 100p 50V Ceramic
C9662	VCCCCZ1HH101JY	AB		J	Capacitor 100p 50V Ceramic
C9664	VCCCCZ1HH101JY	AB		J	Capacitor 100p 50V Ceramic
C9666	VCKYCZ1EB103KY	AA		J	Capacitor 0.01 25V Ceramic
C9667	RC-KZA616WJQZY	AB		J	Capacitor 10 10V Ceramic
D503	RH-EXA629WJQZY		N	S	Zener Diode RKZ3.9B2KG
D504	RH-EXA629WJQZY		N	S	Zener Diode RKZ3.9B2KG
D507	RH-EXA633WJQZY	AA		J	Zener Diode RKZ5.6B2KG
D508	RH-EXA633WJQZY	AA		J	Zener Diode RKZ5.6B2KG
D509	RH-EXA633WJQZY	AA		J	Zener Diode RKZ5.6B2KG
D510	RH-EXA633WJQZY	AA		J	Zener Diode RKZ5.6B2KG
D512	VHD1SS184++-1Y		N	S	Diode 1SS184(T5L,F,T)
D515	RH-EXA633WJQZY	AA		J	Zener Diode RKZ5.6B2KG
D518	RH-EXA637WJQZY		N	S	Zener Diode RKZ8.2B2KG
D519	RH-EXA637WJQZY		N	S	Zener Diode RKZ8.2B2KG
D520	VHPGPFMV51T-1	AF		J	Photo Diode GPFMV51T
D521	RH-EXA641WJQZY	AA		J	Zener Diode RKZ12B2KG
D522	RH-EXA633WJQZY	AA		J	Zener Diode RKZ5.6B2KG
D523	RH-EXA641WJQZY	AA		J	Zener Diode RKZ12B2KG
D524	RH-EXA641WJQZY	AA		J	Zener Diode RKZ12B2KG
D525	RH-EXA633WJQZY	AA		J	Zener Diode RKZ5.6B2KG
D526	RH-EXA641WJQZY	AA		J	Zener Diode RKZ12B2KG
D527	VHD1SS184++-1Y		N	S	Diode 1SS184(T5L,F,T)
D529	VHD1SS184++-1Y		N	S	Diode 1SS184(T5L,F,T)
D530	VHD1SS184++-1Y		N	S	Diode 1SS184(T5L,F,T)
D1301	VHDRB156L40-1Y		N	S	Diode RB156L-40TE25
D1302	VHDRB156L40-1Y		N	S	Diode RB156L-40TE25
D1303	VHD1SR154++-1Y	AC		J	Diode 1SR154-400TE25
D1304	VHDRB156L40-1Y		N	S	Diode RB156L-40TE25
D1305	VHDRB156L40-1Y		N	S	Diode RB156L-40TE25
D1308	VHD1SS226//-1Y	AC		J	Diode 1SS226(T5L,F,T)
D1501	RH-EXA633WJQZY	AA		J	Zener Diode RKZ5.6B2KG
D1508	VHD1SS184++-1Y		N	S	Diode 1SS184(T5L,F,T)
D1509	VHD1SS184++-1Y		N	S	Diode 1SS184(T5L,F,T)
D1511	VHD1SS184++-1Y		N	S	Diode 1SS184(T5L,F,T)
D1512	VHD1SS420++-1Y		N	S	Diode 1SS420(TPL3,F)1SS420(TL3,F,T)
D1513	VHD1SS184++-1Y		N	S	Diode 1SS184(T5L,F,T)
D1517	VHD1SS184++-1Y		N	S	Diode 1SS184(T5L,F,T)
D2701	VHD1SS184++-1Y		N	S	Diode 1SS184(T5L,F,T)
D3301	RH-PXA018WJZZY	AC		J	LED GM1HD55200A
D3303	RH-EXA641WJQZY	AA		J	Zener Diode RKZ12B2KG
D3304	VHD1SS226//-1Y	AC		J	Diode 1SS226(T5L,F,T)
D3305	RH-EXA632WJQZY		N	S	Zener Diode RKZ5.1B2KG

NO.	PARTS CODE	PRICE RANK	NEW MARK	PART DELIVERY	DESCRIPTION
[2] DKEYDF455FM07 (MAIN Unit)					
D3306	RH-EXA632WJQZY		N	S	Zener Diode RKZ5.1B2KG
D3309	RH-EXA641WJQZY	AA		J	Zener Diode RKZ12B2KG
D3310	RH-EXA629WJQZY		N	S	Zener Diode RKZ3.9B2KG
D3311	VHD1SS226//-1Y	AC		J	Diode 1SS226(T5L,F,T)
D3313	RH-EXA632WJQZY		N	S	Zener Diode RKZ5.1B2KG
D3315	RH-EXA629WJQZY		N	S	Zener Diode RKZ3.9B2KG
D3317	RH-EXA629WJQZY		N	S	Zener Diode RKZ3.9B2KG
D3318	RH-EXA632WJQZY		N	S	Zener Diode RKZ5.1B2KG
D3319	RH-EXA641WJQZY	AA		J	Zener Diode RKZ12B2KG
D3321	VHD1SS226//-1Y	AC		J	Diode 1SS226(T5L,F,T)
D3323	RH-EXA629WJQZY		N	S	Zener Diode RKZ3.9B2KG
D3324	RH-EXA641WJQZY	AA		J	Zener Diode RKZ12B2KG
D3326	RH-EXA641WJQZY	AA		J	Zener Diode RKZ12B2KG
D3329	RH-EXA641WJQZY	AA		J	Zener Diode RKZ12B2KG
D3330	RH-EXA632WJQZY		N	S	Zener Diode RKZ5.1B2KG
D8457	VHD1SS184++-1Y		N	S	Diode 1SS184(T5L,F,T)
D9601	VHDHSU119//-1Y	AB		J	Diode HSU119TRF-E
D9602	RH-EXA633WJQZY	AA		J	Zener Diode RKZ5.6B2KG
D9603	VHDHSU119//-1Y	AB		J	Diode HSU119TRF-E
D9604	VHDHSU119//-1Y	AB		J	Diode HSU119TRF-E
D9605	RH-EXA629WJQZY		N	S	Zener Diode RKZ3.9B2KG
D9606	VHD1SS226//-1Y	AC		J	Diode 1SS226(T5L,F,T)
D9607	VHDHSU119//-1Y	AB		J	Diode HSU119TRF-E
D9608	RH-EXA629WJQZY		N	S	Zener Diode RKZ3.9B2KG
D9609	VHDHSU119//-1Y	AB		J	Diode HSU119TRF-E
D9613	VHDHSU119//-1Y	AB		J	Diode HSU119TRF-E
E3301	PRDARA879WJFW		N	S	Heat Sink
FB501	RBLN-A074WJZZY	AA		J	Ferrite Bead
FB502	RBLN-A074WJZZY	AA		J	Ferrite Bead
FB503	RBLN-A074WJZZY	AA		J	Ferrite Bead
FB504	RBLN-A042WJZZY	AB		J	Ferrite Bead
FB505	RBLN-A042WJZZY	AB		J	Ferrite Bead
FB506	RBLN-A042WJZZY	AB		J	Ferrite Bead
FB507	RBLN-A042WJZZY	AB		J	Ferrite Bead
FB508	RBLN-A074WJZZY	AA		J	Ferrite Bead
FB511	RBLN-A074WJZZY	AA		J	Ferrite Bead
FB512	RBLN-A074WJZZY	AA		J	Ferrite Bead
FB517	RBLN-A074WJZZY	AA		J	Ferrite Bead
FB518	RBLN-A074WJZZY	AA		J	Ferrite Bead
FB521	RBLN-A074WJZZY	AA		J	Ferrite Bead
FB522	RBLN-A074WJZZY	AA		J	Ferrite Bead
FB523	RBLN-A042WJZZY	AB		J	Ferrite Bead
FB524	VRS-CY1JF000JY	AA		J	Ferrite Bead 0 1/16W Metal Oxide
FB525	RBLN-A042WJZZY	AB		J	Ferrite Bead
FB526	VRS-CY1JF000JY	AA		J	Ferrite Bead 0 1/16W Metal Oxide
FB527	RBLN-A042WJZZY	AB		J	Ferrite Bead
FB533	RBLN-0093GEZZY	AB		J	Ferrite Bead
FB534	RBLN-0093GEZZY	AB		J	Ferrite Bead
FB535	RBLN-0093GEZZY	AB		J	Ferrite Bead
FB536	RBLN-A204WJZZY	AA		J	Ferrite Bead
FB537	RBLN-A204WJZZY	AA		J	Ferrite Bead
FB538	RBLN-A204WJZZY	AA		J	Ferrite Bead
FB539	RBLN-A204WJZZY	AA		J	Ferrite Bead
FB540	RBLN-A204WJZZY	AA		J	Ferrite Bead
FB541	RBLN-A204WJZZY	AA		J	Ferrite Bead
FB1102	RBLN-A192WJZZY	AA		J	Ferrite Bead
FB1103	RBLN-A192WJZZY	AA		J	Ferrite Bead
FB1301	RBLN-A375WJQZY	AA		J	Ferrite Bead
FB1302	RBLN-A192WJZZY	AA		J	Ferrite Bead
FB1502	RBLN-A192WJZZY	AA		J	Ferrite Bead
FB1503	RBLN-A192WJZZY	AA		J	Ferrite Bead
FB1512	RBLN-A192WJZZY	AA		J	Ferrite Bead
FB2001	RBLN-A192WJZZY	AA		J	Ferrite Bead
FB2002	RBLN-A192WJZZY	AA		J	Ferrite Bead
FB2003	RBLN-A192WJZZY	AA		J	Ferrite Bead
FB2004	RBLN-A192WJZZY	AA		J	Ferrite Bead
FB2005	RBLN-A192WJZZY	AA		J	Ferrite Bead
FB2006	RBLN-A192WJZZY	AA		J	Ferrite Bead
FB2007	RBLN-A074WJZZY	AA		J	Ferrite Bead
FB2008	RBLN-A192WJZZY	AA		J	Ferrite Bead
FB2009	RBLN-A192WJZZY	AA		J	Ferrite Bead
FB2010	RBLN-A192WJZZY	AA		J	Ferrite Bead
FB2011	RBLN-A074WJZZY	AA		J	Ferrite Bead
FB2012	RBLN-A192WJZZY	AA		J	Ferrite Bead
FB2013	RBLN-A192WJZZY	AA		J	Ferrite Bead
FB2014	RBLN-A192WJZZY	AA		J	Ferrite Bead
FB2020	RBLN-A042WJZZY	AB		J	Ferrite Bead
FB2021	RBLN-A042WJZZY	AB		J	Ferrite Bead
FB2022	RBLN-A042WJZZY	AB		J	Ferrite Bead
FB2621	RBLN-A074WJZZY	AA		J	Ferrite Bead
FB2622	RBLN-A074WJZZY	AA		J	Ferrite Bead
FB2623	RBLN-A074WJZZY	AA		J	Ferrite Bead
FB2624	RBLN-A074WJZZY	AA		J	Ferrite Bead
FB2625	RBLN-A074WJZZY	AA		J	Ferrite Bead
FB2626	RBLN-A074WJZZY	AA		J	Ferrite Bead

NO.	PARTS CODE	PRICE RANK	NEW MARK	PART DELIVERY	DESCRIPTION
[2] DKEYDF455FM07 (MAIN Unit)					
FB2627	RBLN-A074WJZZY	AA		J	Ferrite Bead
FB2628	RBLN-A074WJZZY	AA		J	Ferrite Bead
FB2629	RBLN-A074WJZZY	AA		J	Ferrite Bead
FB2630	RBLN-A074WJZZY	AA		J	Ferrite Bead
FB2631	RBLN-A074WJZZY	AA		J	Ferrite Bead
FB2632	RBLN-A192WJZZY	AA		J	Ferrite Bead
FB2633	RBLN-A192WJZZY	AA		J	Ferrite Bead
FB2634	RBLN-A192WJZZY	AA		J	Ferrite Bead
FB2635	RBLN-A192WJZZY	AA		J	Ferrite Bead
FB2636	RBLN-A192WJZZY	AA		J	Ferrite Bead
FB2701	RBLN-A018WJZZY	AA		J	Ferrite Bead
FB2702	RBLN-A018WJZZY	AA		J	Ferrite Bead
FB2703	RBLN-A018WJZZY	AA		J	Ferrite Bead
FB2704	RBLN-A018WJZZY	AA		J	Ferrite Bead
FB2705	RBLN-A018WJZZY	AA		J	Ferrite Bead
FB2706	RBLN-A018WJZZY	AA		J	Ferrite Bead
FB2707	RBLN-A018WJZZY	AA		J	Ferrite Bead
FB2708	RBLN-A018WJZZY	AA		J	Ferrite Bead
FB2709	RBLN-A206WJZZY	AA		J	Ferrite Bead
FB2712	RBLN-A206WJZZY	AA		J	Ferrite Bead
FB3301	RBLN-A192WJZZY	AA		J	Ferrite Bead
FB3302	RBLN-A192WJZZY	AA		J	Ferrite Bead
FB3303	RBLN-A192WJZZY	AA		J	Ferrite Bead
FB3304	RBLN-A192WJZZY	AA		J	Ferrite Bead
FB3305	RBLN-A192WJZZY	AA		J	Ferrite Bead
FB3306	RBLN-A192WJZZY	AA		J	Ferrite Bead
FB3308	RBLN-A192WJZZY	AA		J	Ferrite Bead
FB4401	RBLN-A192WJZZY	AA		J	Ferrite Bead
FB4404	RBLN-A192WJZZY	AA		J	Ferrite Bead
FB4405	RBLN-A192WJZZY	AA		J	Ferrite Bead
FB4406	RBLN-A192WJZZY	AA		J	Ferrite Bead
FB9501	RBLN-A206WJZZY	AA		J	Ferrite Bead
FB9502	RBLN-A206WJZZY	AA		J	Ferrite Bead
FB9503	RBLN-A206WJZZY	AA		J	Ferrite Bead
FB9603	RBLN-A206WJZZY	AA		J	Ferrite Bead
FB9604	RBLN-A206WJZZY	AA		J	Ferrite Bead
FB9605	RBLN-A206WJZZY	AA		J	Ferrite Bead
FB9606	RBLN-A206WJZZY	AA		J	Ferrite Bead
FB9607	RBLN-A206WJZZY	AA		J	Ferrite Bead
FB9608	RBLN-A206WJZZY	AA		J	Ferrite Bead
FB9609	RBLN-A206WJZZY	AA		J	Ferrite Bead
FB9610	RBLN-A074WJZZY	AA		J	Ferrite Bead
FB9611	RBLN-A074WJZZY	AA		J	Ferrite Bead
FB9612	RBLN-A074WJZZY	AA		J	Ferrite Bead
FB9613	RBLN-A206WJZZY	AA		J	Ferrite Bead
FB9616	RBLN-A074WJZZY	AA		J	Ferrite Bead
FB9617	RBLN-A206WJZZY	AA		J	Ferrite Bead
FB9619	RBLN-A074WJZZY	AA		J	Ferrite Bead
FB9620	RBLN-A074WJZZY	AA		J	Ferrite Bead
FB9621	RBLN-A074WJZZY	AA		J	Ferrite Bead
FB9622	RBLN-A192WJZZY	AA		J	Ferrite Bead
FB9634	RBLN-A074WJZZY	AA		J	Ferrite Bead
FL3301	RFiLNA119WJZZY	AC		J	Filter
FL3302	RFiLNA119WJZZY	AC		J	Filter
FL3303	RFiLNA119WJZZY	AC		J	Filter
FL3304	RFiLNA119WJZZY	AC		J	Filter
FL3501	RFiLNA119WJZZY	AC		J	Filter
FL3502	RFiLNA119WJZZY	AC		J	Filter
FL3503	RFiLNA119WJZZY	AC		J	Filter
FL3504	RFiLNA119WJZZY	AC		J	Filter
FL3505	RFiLNA119WJZZY	AC		J	Filter
FL3506	RFiLNA119WJZZY	AC		J	Filter
IC501	RH-iXD108WJQZS			J	IC 24LC21AT-I/SN
IC503	VHiT7SET08U1EY	AC		J	IC TC7SET08FU(5L,JF,T
IC504	VHiMM1506XN-1Y	AD		J	IC MM1506XNRE
IC506	VHiM3221EiP-1Y	AK		J	IC MAX3221EIPower
IC1101	VHiTC7W53U/-1Y	AF		J	IC TC7W53FU(TE12L,F)
IC1102	VHiLV4053FT-1Y	AE		J	IC TC74LVX4053FT(EL)
IC1103	VHiTCR5SB25-1Y	AD		J	IC TCR5SB25(TE85L,F)
IC1104	VHiNJ2888F5-1Y	AC		J	IC NJM2888F05(TE1)
IC1106	VHiSTV0297E-1Q		N	S	IC STV0297E
IC1107	VHiS170B50U-1Y		N	S	IC S-1170B50UC-OUJTFG
IC1301	RH-iXC563WJQZY	AR		J	IC LNBH23PPR/1B
IC1303	VHiMP2303A+-1Y	AF		J	IC MP2303ADN-LF-Z
IC1501	VHiCM123408-1Y	AE		J	IC CM1234-08DE
IC1502	VHiCM123408-1Y	AE		J	IC CM1234-08DE
IC1503	VHiCM123408-1Y	AE		J	IC CM1234-08DE
IC1504	VHiSii9287+-1Q	AP		J	IC Sil9287ACNU
IC1505	VHiAHC1G08W-1Y	AD		J	IC 74AHC1G08GW/G,125
IC1506	VHiCM123408-1Y	AE		J	IC CM1234-08DE
IC1508	VHiLCX04FT+-1Y	AD		J	IC TC74LCX04FT(EL,K)
IC2001	VHiS80927NM-1Y	AC		J	IC S-80927CNMC-G8XT2G
IC2002	RH-iXC786WJNJQ			J	IC R5F364A6NFB
IC2004	VHiR24002AS-1Y		N	S	IC R1EX24002ASAS0A
IC2005	VHiLCX125FT-1Y	AD		J	IC TC74LCX125FT(EL,K)

NO.	PARTS CODE	PRICE RANK	NEW MARK	PART DELIVERY	DESCRIPTION
[2] DKEYDF455FM07 (MAIN Unit)					
IC2006	VHiTCVHC32T-1Y	AE		J	IC TC74VHC32FT(EL)
IC2007	VHiAHC1G08W-1Y	AD		J	IC 74AHC1G08GW/G,125
IC2008	VHi7WH126FU-1Y	AE		J	IC TC7WH126FU(TE12L,F)
IC2009	VHiTC7SH00U-1Y	AC		J	IC TC7SH00FU(T5L,JF,T
IC2601	VHiHC2G66DP-1Y	AD		J	IC 74HC2G66DP,125
IC2701	VHiYSS951VZ-1Y	AN		J	IC YSS951-VZE2
IC2702	VHiYDA164QZ-1Y	AH		J	IC YDA164-QZE2
IC2703	VHiYDA164QZ-1Y	AH		J	IC YDA164-QZE2
IC3301	VHiS170B50U-1Y		N	S	IC S-1170B50UC-OUJTFG
IC3302	Not Available	-	N	-	IC MT5391DWCJ (PWB Replacement)
IC3501	RH-iXC754WJQZQ	AX		J	IC H5PS1G63EFR-G7C
IC3502	RH-iXC754WJQZQ	AX		J	IC H5PS1G63EFR-G7C
IC4401	VHiLCX244FT-1Y	AE		J	IC TC74LCX244FT(EL,K)
IC4402	VHiLCX244FT-1Y	AE		J	IC TC74LCX244FT(EL,K)
IC4403	VHiLCX244FT-1Y	AE		J	IC TC74LCX244FT(EL,K)
IC4404	VHiAOZ1320C-1Y	AE		J	IC AOZ1320CI-04
IC4405	VHiMT8295AE-1Q		N	S	IC MT8295AE
IC4409	VHiLCX157FT-1Y	AD		J	IC TC74LCX157FT(EKJ)
IC4410	VHiS170B50U-1Y		N	S	IC S-1170B50UC-OUJTFG
IC8401	Not Available	-		-	IC K9F1208U0C-PCB0 (PWB Replacement)
IC8451	VHi7WH126FU-1Y	AE		J	IC TC7WH126FU(TE12L,F)
IC8452	VHiLCX157FT-1Y	AD		J	IC TC74LCX157FT(EKJ)
IC8454	VHiAHC1G08W-1Y	AD		J	IC 74AHC1G08GW/G,125
IC8455	VHiR24064AS-1Y	AD		J	IC R1EX24064ASAS0A
IC9501	VHiKSZ8041T-1Y		N	S	IC KSZ8041TLI
IC9601	VHiHC2G66DP-1Y	AD		J	IC 74HC2G66DP,125
IC9603	VHiMM3141YN-1Y	AC		J	IC MM3141YNRE
IC9604	VHiMP2303A+-1Y	AF		J	IC MP2303ADN-LF-Z
IC9605	VHiMP2303A+-1Y	AF		J	IC MP2303ADN-LF-Z
IC9606	VHiMP2303A+-1Y	AF		J	IC MP2303ADN-LF-Z
IC9608	VHiMP2303A+-1Y	AF		J	IC MP2303ADN-LF-Z
IC9609	VHiTC5B33A+-1Y		N	S	IC TCR5SB33A(5LSP1,FT
IC9610	VHiPQ1LAX95-1Y	AD		J	IC PQ1LAX95MSPQ
IC9612	VHiTAR5SB50-1Y	AC		J	IC TAR5SB50(TE85L,F)
J501	QJAKEA073WJZZ	AD		J	Jack
J504	QJAKJ0047CEZZ	AD		J	Jack
J505	QJAKMA002WJZZ	AE		J	Jack
J3301	QSOCZA205WJQZ		N	S	Jack
J9501	QJAKZA081WJQZ	AH		J	Jack
L502	VPCEM100MR70NY	AC		J	Coil Peaking 10μH
L504	VPMTN1R8JR54NY		N	S	Coil Peaking 1.8μH
L1102	VPCEM2R2MR23NY	AC		J	Coil Peaking 2.2μH
L1103	VPCEM100MR70NY	AC		J	Coil Peaking 10μH
L1301	RCiLPB017WJQZY	AC		J	Coil
L1302	RCiLPB016WJQZY	AC		J	Coil
L1303	RCiLP0303TAZZY	AG		J	Coil
L1304	RCiLPB012WJQZY		N	S	Coil
L1501	RCiLFA228WJZZY	AD		J	Coil
L1502	RCiLFA228WJZZY	AD		J	Coil
L1503	RCiLFA228WJZZY	AD		J	Coil
L1504	RCiLFA228WJZZY	AD		J	Coil
L2601	RCiLFA119WJZZY	AE		J	Coil
L2602	RCiLFA119WJZZY	AE		J	Coil
L2603	RCiLFA119WJZZY	AE		J	Coil
L2604	RCiLFA119WJZZY	AE		J	Coil
L2605	RCiLFA119WJZZY	AE		J	Coil
L2606	RCiLFA119WJZZY	AE		J	Coil
L2701	RCiLPA888WJZZY	AG		J	Coil
L2702	RCiLPA888WJZZY	AG		J	Coil
L2703	RCiLPA888WJZZY	AG		J	Coil
L2704	RCiLPA888WJZZY	AG		J	Coil
L2705	RCiLPA886WJZZY	AD		J	Coil
L2706	RCiLPA886WJZZY	AD		J	Coil
L3301	RCiLFA228WJZZY	AD		J	Coil
L9501	RCiLFA279WJZZY	AC		J	Coil
L9502	RCiLFA279WJZZY	AC		J	Coil
L9602	RCiLPB016WJQZY	AC		J	Coil
L9604	RCiLPB016WJQZY	AC		J	Coil
L9605	RCiLPB012WJQZY		N	S	Coil
L9606	RCiLPB014WJQZY	AC		J	Coil
LUG9601	QLUGHA022WJZZY		N	S	Lug
LUG9602	QLUGHA022WJZZY		N	S	Lug
LUG9603	QLUGHA022WJZZY		N	S	Lug
LUG9604	QLUGHA022WJZZY		N	S	Lug
LUG9605	QLUGHA022WJZZY		N	S	Lug
LUG9607	QLUGHA022WJZZY		N	S	Lug
LUG9608	QLUGHA022WJZZY		N	S	Lug
P2005	QPLGNA335WJZZY	AD		J	Plug
P2006	QPLGNA323WJZZY	AC		J	Plug
P2601	QCNCWA671WJQZY	AH		J	Plug
P2701	QPLGNA161WJZZY	AE		J	Plug
P2702	QPLGNA158WJZZY	AD		J	Plug
P9601	QPLGNA168WJZZY	AF		J	Plug
P9602	QPLGNA329WJZZY	AD		J	Plug
Q502	VSiMH23T110-1Y	AC		J	Transistor IMH23T110

NO.	PARTS CODE	PRICE RANK	NEW MARK	PART DELIVERY	DESCRIPTION
[2] DKEYDF455FM07 (MAIN Unit)					
Q505	VSRT1N141U/-1Y	AB		J	Transistor RT1N141U-T111-1
Q506	VSiMH23T110-1Y	AC		J	Transistor IMH23T110
Q1103	VSRT1N141U/-1Y	AB		J	Transistor RT1N141U-T111-1
Q1104	VS2SC3928AR-1Y	AB		J	Transistor 2SC3928A-T112-1R
Q1105	VS2SC3928AR-1Y	AB		J	Transistor 2SC3928A-T112-1R
Q1106	VS2SA1530AR-1Y	AB		J	Transistor 2SA1530A-T112-1R
Q1301	VSRT1N141U/-1Y	AB		J	Transistor RT1N141U-T111-1
Q1302	VSRT1N141U/-1Y	AB		J	Transistor RT1N141U-T111-1
Q1501	VSRT1N141U/-1Y	AB		J	Transistor RT1N141U-T111-1
Q1508	VS2SA2061++-1Y		N	S	Transistor 2SA2061(TE85L,F)
Q1509	VSRT1N141U/-1Y	AB		J	Transistor RT1N141U-T111-1
Q2002	VSRN4982///-1Y	AB		J	Transistor RN4982(TE85L,F)
Q2003	VSRN4982///-1Y	AB		J	Transistor RN4982(TE85L,F)
Q2005	VSRT1N141U/-1Y	AB		J	Transistor RT1N141U-T111-1
Q2006	VSRT1N141U/-1Y	AB		J	Transistor RT1N141U-T111-1
Q2008	VSRN4982///-1Y	AB		J	Transistor RN4982(TE85L,F)
Q2009	VSHN7G04FUA-1Y	AB		J	Transistor HN7G04FU-A(TE85L,F
Q2603	VSRT1N141U/-1Y	AB		J	Transistor RT1N141U-T111-1
Q2701	VSRT1N141U/-1Y	AB		J	Transistor RT1N141U-T111-1
Q3301	VSRN4982///-1Y	AB		J	Transistor RN4982(TE85L,F)
Q4401	VSRT1N141U/-1Y	AB		J	Transistor RT1N141U-T111-1
Q9601	VSRN4982///-1Y	AB		J	Transistor RN4982(TE85L,F)
Q9604	VSHN7G04FUA-1Y	AB		J	Transistor HN7G04FU-A(TE85L,F
Q9607	VS2SC3928AR-1Y	AB		J	Transistor 2SC3928A-T112-1R
Q9609	VSRT1P241U/-1Y	AB		J	Transistor RT1P241U-T11-1
R504	VRS-CZ1JF103JY	AA		J	Resistor 10k 1/16W Metal Oxide
R505	VRS-TQ2EF750JY	AA		J	Resistor 75 1/4W Metal Oxide
R506	VRS-TQ2EF750JY	AA		J	Resistor 75 1/4W Metal Oxide
R507	VRS-TQ2EF750JY	AA		J	Resistor 75 1/4W Metal Oxide
R508	VRS-CZ1JF333JY	AA		J	Resistor 33k 1/16W Metal Oxide
R511	VRS-CZ1JF102JY	AA		J	Resistor 1k 1/16W Metal Oxide
R512	VRS-CZ1JF102JY	AA		J	Resistor 1k 1/16W Metal Oxide
R514	VRS-CZ1JF104JY	AA		J	Resistor 100k 1/16W Metal Oxide
R516	VRS-TQ2EF101JY	AA		J	Resistor 100 1/4W Metal Oxide
R517	VRS-CZ1JF104JY	AA		J	Resistor 100k 1/16W Metal Oxide
R518	VRS-TQ2EF680JY	AA		J	Resistor 68 1/4W Metal Oxide
R522	VRS-CZ1JF221JY	AA		J	Resistor 220 1/16W Metal Oxide
R523	VRS-CZ1JF102JY	AA		J	Resistor 1k 1/16W Metal Oxide
R524	VRS-CZ1JF102JY	AA		J	Resistor 1k 1/16W Metal Oxide
R530	VRS-TQ2EF750JY	AA		J	Resistor 75 1/4W Metal Oxide
R533	VRS-CZ1JF221JY	AA		J	Resistor 220 1/16W Metal Oxide
R535	VRS-TQ2EF750JY	AA		J	Resistor 75 1/4W Metal Oxide
R537	VRS-TQ2EF750JY	AA		J	Resistor 75 1/4W Metal Oxide
R541	VRS-TQ2EF750JY	AA		J	Resistor 75 1/4W Metal Oxide
R544	VRS-TQ2EF750JY	AA		J	Resistor 75 1/4W Metal Oxide
R547	VRK-SB1FF101JY	AA		J	Resistor 100 1/32W Metal Composition
R549	VRS-CZ1JF102JY	AA		J	Resistor 1k 1/16W Metal Oxide
R551	VRS-CZ1JF102JY	AA		J	Resistor 1k 1/16W Metal Oxide
R552	VRS-TV1JD221JY	AA		J	Resistor 220 1/16W Metal Oxide
R553	VRS-TV1JD221JY	AA		J	Resistor 220 1/16W Metal Oxide
R554	VRS-CZ1JF104JY	AA		J	Resistor 100k 1/16W Metal Oxide
R555	VRS-CZ1JF104JY	AA		J	Resistor 100k 1/16W Metal Oxide
R564	VRS-CZ1JF102JY	AA		J	Resistor 1k 1/16W Metal Oxide
R565	VRS-CZ1JF102JY	AA		J	Resistor 1k 1/16W Metal Oxide
R567	VRS-CZ1JF104JY	AA		J	Resistor 100k 1/16W Metal Oxide
R568	VRS-CZ1JF104JY	AA		J	Resistor 100k 1/16W Metal Oxide
R569	VRS-CZ1JF564JY	AB		J	Resistor 560k 1/16W Metal Oxide
R571	VRS-CZ1JF564JY	AB		J	Resistor 560k 1/16W Metal Oxide
R588	VRS-CZ1JF102JY	AA		J	Resistor 1k 1/16W Metal Oxide
R590	VRS-TW2ED101JY	AA		J	Resistor 100 1/4W Metal Oxide
R591	VRS-CZ1JF104JY	AA		J	Resistor 100k 1/16W Metal Oxide
R592	VRS-CZ1JF101JY	AA		J	Resistor 100 1/16W Metal Oxide
R593	VRS-TW2ED101JY	AA		J	Resistor 100 1/4W Metal Oxide
R594	VRS-CZ1JF104JY	AA		J	Resistor 100k 1/16W Metal Oxide
R599	VRS-TQ2EF750JY	AA		J	Resistor 75 1/4W Metal Oxide
R600	VRS-CZ1JF104JY	AA		J	Resistor 100k 1/16W Metal Oxide
R601	VRS-CZ1JF000JY	AA		J	Resistor 0 1/16W Metal Oxide
R602	VRS-CZ1JF473JY	AA		J	Resistor 47k 1/16W Metal Oxide
R603	VRS-CZ1JF000JY	AA		J	Resistor 0 1/16W Metal Oxide
R604	VRS-CZ1JF103JY	AA		J	Resistor 10k 1/16W Metal Oxide
R605	VRS-CZ1JF104JY	AA		J	Resistor 100k 1/16W Metal Oxide
R606	VRS-TW2ED101JY	AA		J	Resistor 100 1/4W Metal Oxide
R607	VRS-TW2ED101JY	AA		J	Resistor 100 1/4W Metal Oxide
R608	VRS-TV1JD101JY	AA		J	Resistor 100 1/16W Metal Oxide
R609	VRS-TV1JD101JY	AA		J	Resistor 100 1/16W Metal Oxide
R613	VRS-TV1JD101JY	AA		J	Resistor 100 1/16W Metal Oxide
R620	VRS-CZ1JF103JY	AA		J	Resistor 10k 1/16W Metal Oxide
R623	VRS-CZ1JF472JY	AA		J	Resistor 4.7k 1/16W Metal Oxide
R625	VRS-CZ1JF102JY	AA		J	Resistor 1k 1/16W Metal Oxide
R632	VRS-CZ1JF000JY	AA		J	Resistor 0 1/16W Metal Oxide
R633	VRS-CZ1JF000JY	AA		J	Resistor 0 1/16W Metal Oxide
R634	VRS-CZ1JF000JY	AA		J	Resistor 0 1/16W Metal Oxide
R636	VRS-CZ1JF000JY	AA		J	Resistor 0 1/16W Metal Oxide
R637	VRS-CZ1JF000JY	AA		J	Resistor 0 1/16W Metal Oxide
R639	VRS-CZ1JF000JY	AA		J	Resistor 0 1/16W Metal Oxide

NO.	PARTS CODE	PRICE RANK	NEW MARK	PART DELIVERY	DESCRIPTION
[2] DKEYDF455FM07 (MAIN Unit)					
R654	VRS-CZ1JF472JY	AA		J	Resistor 4.7k 1/16W Metal Oxide
R655	VRS-CZ1JF472JY	AA		J	Resistor 4.7k 1/16W Metal Oxide
R656	VRS-CZ1JF331JY	AA		J	Resistor 330 1/16W Metal Oxide
R657	VRS-CZ1JF331JY	AA		J	Resistor 330 1/16W Metal Oxide
R658	VRS-CZ1JF000JY	AA		J	Resistor 0 1/16W Metal Oxide
R662	VRS-CZ1JF000JY	AA		J	Resistor 0 1/16W Metal Oxide
R663	VRS-CZ1JF000JY	AA		J	Resistor 0 1/16W Metal Oxide
R665	VRS-CZ1JF000JY	AA		J	Resistor 0 1/16W Metal Oxide
R1103	VRS-CZ1JF000JY	AA		J	Resistor 0 1/16W Metal Oxide
R1104	VRS-CZ1JF472JY	AA		J	Resistor 4.7k 1/16W Metal Oxide
R1105	VRS-CZ1JF000JY	AA		J	Resistor 0 1/16W Metal Oxide
R1106	VRS-CZ1JF151JY	AA		J	Resistor 150 1/16W Metal Oxide
R1107	VRS-CZ1JF471JY	AA		J	Resistor 470 1/16W Metal Oxide
R1109	VRS-CZ1JF471JY	AA		J	Resistor 470 1/16W Metal Oxide
R1110	VRS-CZ1JF103JY	AA		J	Resistor 10k 1/16W Metal Oxide
R1112	VRS-CZ1JF103JY	AA		J	Resistor 10k 1/16W Metal Oxide
R1113	VRS-CZ1JF392JY	AA		J	Resistor 3.9k 1/16W Metal Oxide
R1115	VRS-CZ1JF391JY	AA		J	Resistor 390 1/16W Metal Oxide
R1116	VRS-CZ1JF151JY	AA		J	Resistor 150 1/16W Metal Oxide
R1117	VRS-CZ1JF103JY	AA		J	Resistor 10k 1/16W Metal Oxide
R1118	VRS-CZ1JF103JY	AA		J	Resistor 10k 1/16W Metal Oxide
R1119	VRS-CZ1JF100JY	AA		J	Resistor 10 1/16W Metal Oxide
R1121	VRS-CZ1JF391JY	AA		J	Resistor 390 1/16W Metal Oxide
R1125	VRK-SB1FF000JY	AA		J	Resistor 0 1/32W Metal Composition
R1126	VRK-SB1FF221JY		N	S	Resistor 220 1/32W Metal Composition
R1127	VRS-CZ1JF103JY	AA		J	Resistor 10k 1/16W Metal Oxide
R1129	VRK-SA1JF222JY	AB		J	Resistor 2.2k 1/16W Metal Composition
R1130	VRK-SB1FF220JY	AA		J	Resistor 22 1/32W Metal Composition
R1132	VRS-CZ1JF103JY	AA		J	Resistor 10k 1/16W Metal Oxide
R1136	VRS-CZ1JF000JY	AA		J	Resistor 0 1/16W Metal Oxide
R1137	VRS-CZ1JF000JY	AA		J	Resistor 0 1/16W Metal Oxide
R1140	VRS-CZ1JF102JY	AA		J	Resistor 1k 1/16W Metal Oxide
R1141	VRK-SB1FF220JY	AA		J	Resistor 22 1/32W Metal Composition
R1142	VRK-SB1FF220JY	AA		J	Resistor 22 1/32W Metal Composition
R1143	VRS-CZ1JF000JY	AA		J	Resistor 0 1/16W Metal Oxide
R1144	VRS-CZ1JF000JY	AA		J	Resistor 0 1/16W Metal Oxide
R1145	VRS-CZ1JF151JY	AA		J	Resistor 150 1/16W Metal Oxide
R1146	VRS-CZ1JF102JY	AA		J	Resistor 1k 1/16W Metal Oxide
R1147	VRS-CZ1JF000JY	AA		J	Resistor 0 1/16W Metal Oxide
R1148	VRS-CZ1JF000JY	AA		J	Resistor 0 1/16W Metal Oxide
R1156	VRS-CZ1JF000JY	AA		J	Resistor 0 1/16W Metal Oxide
R1157	VRS-CZ1JF100JY	AA		J	Resistor 10 1/16W Metal Oxide
R1301	VRS-CZ1JF104JY	AA		J	Resistor 100k 1/16W Metal Oxide
R1302	VRS-CZ1JF151JY	AA		J	Resistor 150 1/16W Metal Oxide
R1303	VRS-CZ1JF103JY	AA		J	Resistor 10k 1/16W Metal Oxide
R1306	VRS-CZ1JF103JY	AA		J	Resistor 10k 1/16W Metal Oxide
R1307	VRS-CZ1JF222JY	AA		J	Resistor 2.2k 1/16W Metal Oxide
R1309	VRS-CZ1JF222JY	AA		J	Resistor 2.2k 1/16W Metal Oxide
R1310	VRS-CZ1JF103JY	AA		J	Resistor 10k 1/16W Metal Oxide
R1311	VRS-CZ1JF103JY	AA		J	Resistor 10k 1/16W Metal Oxide
R1313	VRS-CZ1JF103JY	AA		J	Resistor 10k 1/16W Metal Oxide
R1314	VRS-CZ1JF153JY	AA		J	Resistor 15k 1/16W Metal Oxide
R1315	VRS-CZ1JF000JY	AA		J	Resistor 0 1/16W Metal Oxide
R1316	VRS-CZ1JF101JY	AA		J	Resistor 100 1/16W Metal Oxide
R1322	VRS-TQ2EF3R3JY	AA		J	Resistor 3.3 1/4W Metal Oxide
R1323	VRS-CZ1JF150JY	AA		J	Resistor 15 1/16W Metal Oxide
R1325	VRS-CZ1JF100JY	AA		J	Resistor 10 1/16W Metal Oxide
R1326	VRS-CZ1JF272JY	AA		J	Resistor 2.7k 1/16W Metal Oxide
R1331	VRS-CZ1JF103JY	AA		J	Resistor 10k 1/16W Metal Oxide
R1338	VRS-CZ1JF103FY	AB		J	Resistor 10k 1/16W Metal Oxide
R1341	VRS-CZ1JF272FY	AA		J	Resistor 2.7k 1/16W Metal Oxide
R1342	VRS-CZ1JF331JY	AA		J	Resistor 330 1/16W Metal Oxide
R1343	VRK-SB1FF100JY	AA		J	Resistor 10 1/32W Metal Composition
R1344	VRK-SB1FF100JY	AA		J	Resistor 10 1/32W Metal Composition
R1345	VRK-SB1FF100JY	AA		J	Resistor 10 1/32W Metal Composition
R1346	VRS-CZ1JF104JY	AA		J	Resistor 100k 1/16W Metal Oxide
R1347	VRS-CZ1JF100JY	AA		J	Resistor 10 1/16W Metal Oxide
R1348	VRS-CZ1JF100JY	AA		J	Resistor 10 1/16W Metal Oxide
R1501	VRS-CZ1JF473JY	AA		J	Resistor 47k 1/16W Metal Oxide
R1502	VRS-CZ1JF181JY	AA		J	Resistor 180 1/16W Metal Oxide
R1507	VRS-CZ1JF273JY	AA		J	Resistor 27k 1/16W Metal Oxide
R1509	VRS-CZ1JF472JY	AA		J	Resistor 4.7k 1/16W Metal Oxide
R1511	VRS-CZ1JF560JY	AA		J	Resistor 56 1/16W Metal Oxide
R1512	VRK-SB1FF473JY	AB		J	Resistor 47k 1/32W Metal Composition
R1514	VRS-CZ1JF103JY	AA		J	Resistor 10k 1/16W Metal Oxide
R1515	VRS-CZ1JF101JY	AA		J	Resistor 100 1/16W Metal Oxide
R1516	VRS-CZ1JF473JY	AA		J	Resistor 47k 1/16W Metal Oxide
R1517	VRS-CZ1JF103JY	AA		J	Resistor 10k 1/16W Metal Oxide
R1527	VRS-CZ1JF103JY	AA		J	Resistor 10k 1/16W Metal Oxide
R1531	VRS-CZ1JF103JY	AA		J	Resistor 10k 1/16W Metal Oxide
R1536	VRK-SB1FF100JY	AA		J	Resistor 10 1/32W Metal Composition
R1541	VRK-SB1FF100JY	AA		J	Resistor 10 1/32W Metal Composition
R1542	VRS-CZ1JF332JY	AA		J	Resistor 3.3k 1/16W Metal Oxide
R1543	VRK-SA1JF100JY	AB		J	Resistor 10 1/16W Metal Composition
R1551	VRS-CZ1JF332JY	AA		J	Resistor 3.3k 1/16W Metal Oxide

NO.	PARTS CODE	PRICE RANK	NEW MARK	PART DELIVERY	DESCRIPTION
[2] DKEYDF455FM07 (MAIN Unit)					
R1552	VRS-CZ1JF100JY	AA		J	Resistor 10 1/16W Metal Oxide
R1553	VRS-CZ1JF332JY	AA		J	Resistor 3.3k 1/16W Metal Oxide
R1554	VRS-CZ1JF332JY	AA		J	Resistor 3.3k 1/16W Metal Oxide
R1555	VRS-CZ1JF100JY	AA		J	Resistor 10 1/16W Metal Oxide
R1556	VRS-CZ1JF100JY	AA		J	Resistor 10 1/16W Metal Oxide
R1557	VRS-CZ1JF100JY	AA		J	Resistor 10 1/16W Metal Oxide
R1558	VRS-CZ1JF331JY	AA		J	Resistor 330 1/16W Metal Oxide
R1561	VRK-SB1FF473JY	AB		J	Resistor 47k 1/32W Metal Composition
R1567	VRS-CZ1JF473JY	AA		J	Resistor 47k 1/16W Metal Oxide
R1568	VRS-CZ1JF473JY	AA		J	Resistor 47k 1/16W Metal Oxide
R1569	VRS-CZ1JF103JY	AA		J	Resistor 10k 1/16W Metal Oxide
R1582	VRK-SA1JF100JY	AB		J	Resistor 10 1/16W Metal Composition
R1584	VRS-CZ1JF100JY	AA		J	Resistor 10 1/16W Metal Oxide
R1586	VRS-CZ1JF000JY	AA		J	Resistor 0 1/16W Metal Oxide
R1587	VRS-CZ1JF000JY	AA		J	Resistor 0 1/16W Metal Oxide
R1589	VRS-CZ1JF102JY	AA		J	Resistor 1k 1/16W Metal Oxide
R1595	VRS-CZ1JF102JY	AA		J	Resistor 1k 1/16W Metal Oxide
R2001	VRS-CZ1JF101JY	AA		J	Resistor 100 1/16W Metal Oxide
R2002	VRS-CZ1JF104JY	AA		J	Resistor 100k 1/16W Metal Oxide
R2003	VRS-CZ1JF102JY	AA		J	Resistor 1k 1/16W Metal Oxide
R2004	VRS-CZ1JF103JY	AA		J	Resistor 10k 1/16W Metal Oxide
R2005	VRS-CZ1JF102JY	AA		J	Resistor 1k 1/16W Metal Oxide
R2007	VRS-CZ1JF472JY	AA		J	Resistor 4.7k 1/16W Metal Oxide
R2008	VRS-CZ1JF102JY	AA		J	Resistor 1k 1/16W Metal Oxide
R2009	VRS-CZ1JF102JY	AA		J	Resistor 1k 1/16W Metal Oxide
R2010	VRS-CZ1JF333JY	AA		J	Resistor 33k 1/16W Metal Oxide
R2011	VRS-CZ1JF472JY	AA		J	Resistor 4.7k 1/16W Metal Oxide
R2012	VRK-SB1FF000JY	AA		J	Resistor 0 1/32W Metal Composition
R2014	VRS-CZ1JF472JY	AA		J	Resistor 4.7k 1/16W Metal Oxide
R2015	VRK-SA1JF100JY	AB		J	Resistor 10 1/16W Metal Composition
R2016	VRS-CZ1JF103JY	AA		J	Resistor 10k 1/16W Metal Oxide
R2017	VRS-CZ1JF103JY	AA		J	Resistor 10k 1/16W Metal Oxide
R2018	VRS-CZ1JF103JY	AA		J	Resistor 10k 1/16W Metal Oxide
R2019	VRS-CZ1JF103JY	AA		J	Resistor 10k 1/16W Metal Oxide
R2020	VRS-CZ1JF103JY	AA		J	Resistor 10k 1/16W Metal Oxide
R2021	VRS-CZ1JF104JY	AA		J	Resistor 100k 1/16W Metal Oxide
R2022	VRS-CZ1JF333JY	AA		J	Resistor 33k 1/16W Metal Oxide
R2023	VRS-CZ1JF473JY	AA		J	Resistor 47k 1/16W Metal Oxide
R2024	VRS-CZ1JF102FY	AA		J	Resistor 1k 1/16W Metal Oxide
R2025	VRS-CZ1JF103JY	AA		J	Resistor 10k 1/16W Metal Oxide
R2026	VRS-CZ1JF103JY	AA		J	Resistor 10k 1/16W Metal Oxide
R2028	VRS-CZ1JF103JY	AA		J	Resistor 10k 1/16W Metal Oxide
R2029	VRS-CZ1JF103JY	AA		J	Resistor 10k 1/16W Metal Oxide
R2030	VRS-CZ1JF472JY	AA		J	Resistor 4.7k 1/16W Metal Oxide
R2031	VRS-CZ1JF000JY	AA		J	Resistor 0 1/16W Metal Oxide
R2032	VRS-CZ1JF223JY	AA		J	Resistor 22k 1/16W Metal Oxide
R2033	VRS-CZ1JF101JY	AA		J	Resistor 100 1/16W Metal Oxide
R2034	VRS-CZ1JF000JY	AA		J	Resistor 0 1/16W Metal Oxide
R2035	VRS-CZ1JF333JY	AA		J	Resistor 33k 1/16W Metal Oxide
R2036	VRS-CZ1JF105JY	AA		J	Resistor 1M 1/16W Metal Oxide
R2038	VRS-CZ1JF000JY	AA		J	Resistor 0 1/16W Metal Oxide
R2039	VRS-CZ1JF101JY	AA		J	Resistor 100 1/16W Metal Oxide
R2044	VRS-CZ1JF100JY	AA		J	Resistor 10 1/16W Metal Oxide
R2045	VRS-CZ1JF106JY	AA		J	Resistor 10M 1/16W Metal Oxide
R2047	VRS-CZ1JF101JY	AA		J	Resistor 100 1/16W Metal Oxide
R2048	VRS-CZ1JF472JY	AA		J	Resistor 4.7k 1/16W Metal Oxide
R2050	VRS-CZ1JF101JY	AA		J	Resistor 100 1/16W Metal Oxide
R2051	VRK-SA1JF100JY	AB		J	Resistor 10 1/16W Metal Composition
R2052	VRS-CZ1JF223JY	AA		J	Resistor 22k 1/16W Metal Oxide
R2053	VRS-CZ1JF394JY	AA		J	Resistor 390k 1/16W Metal Oxide
R2056	VRS-CZ1JF103JY	AA		J	Resistor 10k 1/16W Metal Oxide
R2057	VRS-CZ1JF103JY	AA		J	Resistor 10k 1/16W Metal Oxide
R2058	VRS-CZ1JF100JY	AA		J	Resistor 10 1/16W Metal Oxide
R2060	VRK-SB1FF103JY	AA		J	Resistor 10k 1/32W Metal Composition
R2064	VRS-CZ1JF000JY	AA		J	Resistor 0 1/16W Metal Oxide
R2066	VRK-SA1JF100JY	AB		J	Resistor 10 1/16W Metal Composition
R2068	VRS-CZ1JF103JY	AA		J	Resistor 10k 1/16W Metal Oxide
R2070	VRS-CZ1JF100JY	AA		J	Resistor 10 1/16W Metal Oxide
R2071	VRS-CZ1JF100JY	AA		J	Resistor 10 1/16W Metal Oxide
R2072	VRS-CZ1JF104JY	AA		J	Resistor 100k 1/16W Metal Oxide
R2074	VRS-CZ1JF101JY	AA		J	Resistor 100 1/16W Metal Oxide
R2076	VRS-CZ1JF000JY	AA		J	Resistor 0 1/16W Metal Oxide
R2077	VRS-CZ1JF101JY	AA		J	Resistor 100 1/16W Metal Oxide
R2079	VRS-CZ1JF103JY	AA		J	Resistor 10k 1/16W Metal Oxide
R2080	VRS-CZ1JF103JY	AA		J	Resistor 10k 1/16W Metal Oxide
R2084	VRS-CZ1JF000JY	AA		J	Resistor 0 1/16W Metal Oxide
R2085	VRS-CZ1JF000JY	AA		J	Resistor 0 1/16W Metal Oxide
R2088	VRS-CZ1JF103JY	AA		J	Resistor 10k 1/16W Metal Oxide
R2089	VRS-CZ1JF223JY	AA		J	Resistor 22k 1/16W Metal Oxide
R2090	VRS-CZ1JF472JY	AA		J	Resistor 4.7k 1/16W Metal Oxide
R2091	VRS-CZ1JF103JY	AA		J	Resistor 10k 1/16W Metal Oxide
R2093	VRS-CZ1JF000JY	AA		J	Resistor 0 1/16W Metal Oxide
R2094	VRS-CZ1JF222JY	AA		J	Resistor 2.2k 1/16W Metal Oxide
R2095	VRK-SA1JF222JY	AB		J	Resistor 2.2k 1/16W Metal Composition
R2096	VRS-CZ1JF272JY	AA		J	Resistor 2.7k 1/16W Metal Oxide

NO.	PARTS CODE	PRICE RANK	NEW MARK	PART DELIVERY	DESCRIPTION
[2] DKEYDF455FM07 (MAIN Unit)					
R2613	VRS-CZ1JF000JY	AA		J	Resistor 0 1/16W Metal Oxide
R2620	VRS-CZ1JF000JY	AA		J	Resistor 0 1/16W Metal Oxide
R2635	VRS-CZ1JF103JY	AA		J	Resistor 10k 1/16W Metal Oxide
R2636	VRS-CZ1JF105JY	AA		J	Resistor 1M 1/16W Metal Oxide
R2639	VRS-CZ1JF104JY	AA		J	Resistor 100k 1/16W Metal Oxide
R2641	VRS-CZ1JF000JY	AA		J	Resistor 0 1/16W Metal Oxide
R2642	VRS-CZ1JF103JY	AA		J	Resistor 10k 1/16W Metal Oxide
R2645	VRS-CZ1JF000JY	AA		J	Resistor 0 1/16W Metal Oxide
R2701	VRK-SA1JF100JY	AB		J	Resistor 10 1/16W Metal Composition
R2702	VRS-CZ1JF821JY	AA		J	Resistor 820 1/16W Metal Oxide
R2703	VRS-CZ1JF105JY	AA		J	Resistor 1M 1/16W Metal Oxide
R2704	VRS-CZ1JF000JY	AA		J	Resistor 0 1/16W Metal Oxide
R2705	VRS-CZ1JF000JY	AA		J	Resistor 0 1/16W Metal Oxide
R2706	VRS-CZ1JF000JY	AA		J	Resistor 0 1/16W Metal Oxide
R2707	VRS-CZ1JF000JY	AA		J	Resistor 0 1/16W Metal Oxide
R2708	VRS-CZ1JF472JY	AA		J	Resistor 4.7k 1/16W Metal Oxide
R2709	VRS-CZ1JF472JY	AA		J	Resistor 4.7k 1/16W Metal Oxide
R2710	VRS-CZ1JF000JY	AA		J	Resistor 0 1/16W Metal Oxide
R2714	VRS-CZ1JF472JY	AA		J	Resistor 4.7k 1/16W Metal Oxide
R2715	VRS-CZ1JF472JY	AA		J	Resistor 4.7k 1/16W Metal Oxide
R2716	VRS-CZ1JF000JY	AA		J	Resistor 0 1/16W Metal Oxide
R2717	VRS-CZ1JF000JY	AA		J	Resistor 0 1/16W Metal Oxide
R2718	VRS-CZ1JF000JY	AA		J	Resistor 0 1/16W Metal Oxide
R2719	VRS-CZ1JF000JY	AA		J	Resistor 0 1/16W Metal Oxide
R2720	VRS-CZ1JF000JY	AA		J	Resistor 0 1/16W Metal Oxide
R2725	VRS-CZ1JF000JY	AA		J	Resistor 0 1/16W Metal Oxide
R2726	VRS-CZ1JF000JY	AA		J	Resistor 0 1/16W Metal Oxide
R2727	VRS-CZ1JF000JY	AA		J	Resistor 0 1/16W Metal Oxide
R2728	VRS-CZ1JF000JY	AA		J	Resistor 0 1/16W Metal Oxide
R2729	VRS-CZ1JF000JY	AA		J	Resistor 0 1/16W Metal Oxide
R2730	VRS-CZ1JF000JY	AA		J	Resistor 0 1/16W Metal Oxide
R2731	VRS-CZ1JF000JY	AA		J	Resistor 0 1/16W Metal Oxide
R2732	VRS-CZ1JF000JY	AA		J	Resistor 0 1/16W Metal Oxide
R2733	VRS-CZ1JF103JY	AA		J	Resistor 10k 1/16W Metal Oxide
R2734	VRS-CZ1JF000JY	AA		J	Resistor 0 1/16W Metal Oxide
R2735	VRS-CZ1JF000JY	AA		J	Resistor 0 1/16W Metal Oxide
R2736	VRS-CZ1JF103JY	AA		J	Resistor 10k 1/16W Metal Oxide
R2738	VRS-CZ1JF564JY	AB		J	Resistor 560k 1/16W Metal Oxide
R2739	VRS-CZ1JF000JY	AA		J	Resistor 0 1/16W Metal Oxide
R2740	VRS-CZ1JF000JY	AA		J	Resistor 0 1/16W Metal Oxide
R2741	VRS-CZ1JF224JY	AA		J	Resistor 220k 1/16W Metal Oxide
R2742	VRS-CZ1JF224JY	AA		J	Resistor 220k 1/16W Metal Oxide
R2743	VRS-CZ1JF564JY	AB		J	Resistor 560k 1/16W Metal Oxide
R2744	VRS-CZ1JF000JY	AA		J	Resistor 0 1/16W Metal Oxide
R2745	VRS-CZ1JF103JY	AA		J	Resistor 10k 1/16W Metal Oxide
R2746	VRS-CZ1JF224JY	AA		J	Resistor 220k 1/16W Metal Oxide
R2748	VRS-CZ1JF473JY	AA		J	Resistor 47k 1/16W Metal Oxide
R2749	VRS-CZ1JF103JY	AA		J	Resistor 10k 1/16W Metal Oxide
R2750	VRS-TQ2EF000JY	AB		J	Resistor 0 1/4W Metal Oxide
R2751	VRS-CZ1JF473JY	AA		J	Resistor 47k 1/16W Metal Oxide
R2752	VRS-CZ1JF153JY	AA		J	Resistor 15k 1/16W Metal Oxide
R2753	VRS-TQ2EF000JY	AB		J	Resistor 0 1/4W Metal Oxide
R2756	VRS-CZ1JF563JY	AA		J	Resistor 56k 1/16W Metal Oxide
R2757	VRS-CZ1JF473JY	AA		J	Resistor 47k 1/16W Metal Oxide
R2758	VRS-CZ1JF473JY	AA		J	Resistor 47k 1/16W Metal Oxide
R2759	VRS-CZ1JF000JY	AA		J	Resistor 0 1/16W Metal Oxide
R2760	VRS-CZ1JF000JY	AA		J	Resistor 0 1/16W Metal Oxide
R2761	VRS-TQ2EF000JY	AB		J	Resistor 0 1/4W Metal Oxide
R2762	VRS-TQ2EF000JY	AB		J	Resistor 0 1/4W Metal Oxide
R2769	VRS-CZ1JF473JY	AA		J	Resistor 47k 1/16W Metal Oxide
R2770	VRS-CZ1JF100JY	AA		J	Resistor 10 1/16W Metal Oxide
R2771	VRS-CZ1JF473JY	AA		J	Resistor 47k 1/16W Metal Oxide
R2779	VRS-CZ1JF473JY	AA		J	Resistor 47k 1/16W Metal Oxide
R2781	VRS-CZ1JF000JY	AA		J	Resistor 0 1/16W Metal Oxide
R2782	VRS-CZ1JF000JY	AA		J	Resistor 0 1/16W Metal Oxide
R2784	VRS-CZ1JF103JY	AA		J	Resistor 10k 1/16W Metal Oxide
R3301	VRS-CZ1JF472JY	AA		J	Resistor 4.7k 1/16W Metal Oxide
R3302	VRS-CZ1JF472JY	AA		J	Resistor 4.7k 1/16W Metal Oxide
R3305	VRS-CZ1JF101JY	AA		J	Resistor 100 1/16W Metal Oxide
R3306	VRS-CZ1JF472JY	AA		J	Resistor 4.7k 1/16W Metal Oxide
R3307	VRS-CZ1JF103JY	AA		J	Resistor 10k 1/16W Metal Oxide
R3309	VRS-CZ1JF222JY	AA		J	Resistor 2.2k 1/16W Metal Oxide
R3318	VRS-CZ1JF472JY	AA		J	Resistor 4.7k 1/16W Metal Oxide
R3319	VRS-CZ1JF101JY	AA		J	Resistor 100 1/16W Metal Oxide
R3320	VRS-CZ1JF103JY	AA		J	Resistor 10k 1/16W Metal Oxide
R3321	VRS-CZ1JF131FY	AB		J	Resistor 130 1/16W Metal Oxide
R3322	VRS-CZ1JF100JY	AA		J	Resistor 10 1/16W Metal Oxide
R3323	VRS-CZ1JF512FY	AA		J	Resistor 5.1k 1/16W Metal Oxide
R3324	VRK-SB1FF470JY	AA		J	Resistor 47 1/32W Metal Composition
R3326	VRS-CZ1JF470JY	AA		J	Resistor 47 1/16W Metal Oxide
R3327	VRS-CZ1JF000JY	AA		J	Resistor 0 1/16W Metal Oxide
R3328	VRK-SB1FF102JY	AC		J	Resistor 1k 1/32W Metal Composition
R3329	VRK-SA1JF222JY	AB		J	Resistor 2.2k 1/16W Metal Composition
R3331	VRK-SB1FF102JY	AC		J	Resistor 1k 1/32W Metal Composition
R3332	VRS-CZ1JF000JY	AA		J	Resistor 0 1/16W Metal Oxide

NO.	PARTS CODE	PRICE RANK	NEW MARK	PART DELIVERY	DESCRIPTION
[2] DKEYDF455FM07 (MAIN Unit)					
R3333	VRS-CZ1JF561JY	AA		J	Resistor 560 1/16W Metal Oxide
R3334	VRS-CZ1JF472JY	AA		J	Resistor 4.7k 1/16W Metal Oxide
R3335	VRS-CZ1JF000JY	AA		J	Resistor 0 1/16W Metal Oxide
R3336	VRS-CZ1JF472JY	AA		J	Resistor 4.7k 1/16W Metal Oxide
R3337	VRS-CZ1JF472JY	AA		J	Resistor 4.7k 1/16W Metal Oxide
R3338	VRS-CZ1JF470JY	AA		J	Resistor 47 1/16W Metal Oxide
R3339	VRS-CZ1JF470JY	AA		J	Resistor 47 1/16W Metal Oxide
R3342	VRS-CZ1JF105JY	AA		J	Resistor 1M 1/16W Metal Oxide
R3343	VRS-CZ1JF472JY	AA		J	Resistor 4.7k 1/16W Metal Oxide
R3345	VRS-CZ1JF000JY	AA		J	Resistor 0 1/16W Metal Oxide
R3346	VRS-CZ1JF000JY	AA		J	Resistor 0 1/16W Metal Oxide
R3348	VRS-CZ1JF472JY	AA		J	Resistor 4.7k 1/16W Metal Oxide
R3350	VRS-CZ1JF472JY	AA		J	Resistor 4.7k 1/16W Metal Oxide
R3351	VRS-CZ1JF390JY	AA		J	Resistor 39 1/16W Metal Oxide
R3352	VRS-CZ1JF390JY	AA		J	Resistor 39 1/16W Metal Oxide
R3353	VRS-CZ1JF303JY	AA		J	Resistor 30k 1/16W Metal Oxide
R3354	VRS-CZ1JF303JY	AA		J	Resistor 30k 1/16W Metal Oxide
R3355	VRS-CZ1JF303JY	AA		J	Resistor 30k 1/16W Metal Oxide
R3356	VRS-CZ1JF303JY	AA		J	Resistor 30k 1/16W Metal Oxide
R3357	VRS-CZ1JF303JY	AA		J	Resistor 30k 1/16W Metal Oxide
R3358	VRS-CZ1JF303JY	AA		J	Resistor 30k 1/16W Metal Oxide
R3366	VRS-CZ1JF680JY	AB		J	Resistor 68 1/16W Metal Oxide
R3367	VRS-CZ1JF680JY	AB		J	Resistor 68 1/16W Metal Oxide
R3368	VRS-CZ1JF680JY	AB		J	Resistor 68 1/16W Metal Oxide
R3369	VRS-CZ1JF101JY	AA		J	Resistor 100 1/16W Metal Oxide
R3370	VRS-CZ1JF101JY	AA		J	Resistor 100 1/16W Metal Oxide
R3371	VRS-CZ1JF101JY	AA		J	Resistor 100 1/16W Metal Oxide
R3372	VRS-CZ1JF680JY	AB		J	Resistor 68 1/16W Metal Oxide
R3373	VRS-CZ1JF680JY	AB		J	Resistor 68 1/16W Metal Oxide
R3374	VRS-CZ1JF680JY	AB		J	Resistor 68 1/16W Metal Oxide
R3375	VRS-CZ1JF101JY	AA		J	Resistor 100 1/16W Metal Oxide
R3376	VRS-CZ1JF101JY	AA		J	Resistor 100 1/16W Metal Oxide
R3377	VRS-CZ1JF101JY	AA		J	Resistor 100 1/16W Metal Oxide
R3382	VRS-CZ1JF101JY	AA		J	Resistor 100 1/16W Metal Oxide
R3383	VRS-CZ1JF101JY	AA		J	Resistor 100 1/16W Metal Oxide
R3384	VRS-CZ1JF101JY	AA		J	Resistor 100 1/16W Metal Oxide
R3389	VRS-CZ1JF101JY	AA		J	Resistor 100 1/16W Metal Oxide
R3390	VRS-CZ1JF472JY	AA		J	Resistor 4.7k 1/16W Metal Oxide
R3395	VRS-CZ1JF391JY	AA		J	Resistor 390 1/16W Metal Oxide
R3399	VRS-CZ1JF000JY	AA		J	Resistor 0 1/16W Metal Oxide
R3400	VRS-CZ1JF100JY	AA		J	Resistor 10 1/16W Metal Oxide
R3401	VRS-CZ1JF472JY	AA		J	Resistor 4.7k 1/16W Metal Oxide
R3402	VRS-CZ1JF470JY	AA		J	Resistor 47 1/16W Metal Oxide
R3403	VRS-CZ1JF000JY	AA		J	Resistor 0 1/16W Metal Oxide
R3501	VRK-SA1JF000JY	AB		J	Resistor 0 1/16W Metal Composition
R3502	VRK-SA1JF000JY	AB		J	Resistor 0 1/16W Metal Composition
R3503	VRK-SB1FF100JY	AA		J	Resistor 10 1/32W Metal Composition
R3504	VRK-SB1FF100JY	AA		J	Resistor 10 1/32W Metal Composition
R3505	VRK-SB1FF100JY	AA		J	Resistor 10 1/32W Metal Composition
R3506	VRK-SB1FF100JY	AA		J	Resistor 10 1/32W Metal Composition
R3507	VRK-SB1FF100JY	AA		J	Resistor 10 1/32W Metal Composition
R3508	VRK-SB1FF100JY	AA		J	Resistor 10 1/32W Metal Composition
R3509	VRS-CZ1JF102FY	AA		J	Resistor 1k 1/16W Metal Oxide
R3510	VRS-CZ1JF102FY	AA		J	Resistor 1k 1/16W Metal Oxide
R3511	VRS-CZ1JF101JY	AA		J	Resistor 100 1/16W Metal Oxide
R3512	VRS-CZ1JF101JY	AA		J	Resistor 100 1/16W Metal Oxide
R4404	VRS-CZ1JF103JY	AA		J	Resistor 10k 1/16W Metal Oxide
R4405	VRS-CZ1JF103JY	AA		J	Resistor 10k 1/16W Metal Oxide
R4406	VRS-CZ1JF103JY	AA		J	Resistor 10k 1/16W Metal Oxide
R4407	VRK-SB1FF000JY	AA		J	Resistor 0 1/32W Metal Composition
R4408	VRK-SB1FF000JY	AA		J	Resistor 0 1/32W Metal Composition
R4409	VRS-CZ1JF470JY	AA		J	Resistor 47 1/16W Metal Oxide
R4410	VRS-CZ1JF000JY	AA		J	Resistor 0 1/16W Metal Oxide
R4411	VRK-SB1FF470JY	AA		J	Resistor 47 1/32W Metal Composition
R4413	VRS-CZ1JF470JY	AA		J	Resistor 47 1/16W Metal Oxide
R4414	VRK-SB1FF101JY	AA		J	Resistor 100 1/32W Metal Composition
R4415	VRS-CZ1JF101JY	AA		J	Resistor 100 1/16W Metal Oxide
R4416	VRS-CZ1JF101JY	AA		J	Resistor 100 1/16W Metal Oxide
R4418	VRS-CZ1JF103JY	AA		J	Resistor 10k 1/16W Metal Oxide
R4419	VRS-CZ1JF101JY	AA		J	Resistor 100 1/16W Metal Oxide
R4420	VRS-CZ1JF103JY	AA		J	Resistor 10k 1/16W Metal Oxide
R4421	VRS-CZ1JF103JY	AA		J	Resistor 10k 1/16W Metal Oxide
R4422	VRS-CZ1JF470JY	AA		J	Resistor 47 1/16W Metal Oxide
R4423	VRS-CZ1JF470JY	AA		J	Resistor 47 1/16W Metal Oxide
R4424	VRS-CZ1JF103JY	AA		J	Resistor 10k 1/16W Metal Oxide
R4425	VRS-CZ1JF000JY	AA		J	Resistor 0 1/16W Metal Oxide
R4426	VRS-CZ1JF470JY	AA		J	Resistor 47 1/16W Metal Oxide
R4427	VRS-CZ1JF101JY	AA		J	Resistor 100 1/16W Metal Oxide
R4428	VRS-CZ1JF333JY	AA		J	Resistor 33k 1/16W Metal Oxide
R4429	VRS-CZ1JF103JY	AA		J	Resistor 10k 1/16W Metal Oxide
R4430	VRS-CZ1JF103JY	AA		J	Resistor 10k 1/16W Metal Oxide
R4431	VRK-SB1FF470JY	AA		J	Resistor 47 1/32W Metal Composition
R4432	VRK-SB1FF470JY	AA		J	Resistor 47 1/32W Metal Composition
R4433	VRK-SB1FF470JY	AA		J	Resistor 47 1/32W Metal Composition
R4434	VRS-CZ1JF103JY	AA		J	Resistor 10k 1/16W Metal Oxide

NO.	PARTS CODE	PRICE RANK	NEW MARK	PART DELIVERY	DESCRIPTION
[2] DKEYDF455FM07 (MAIN Unit)					
R4435	VRS-CZ1JF103JY	AA		J	Resistor 10k 1/16W Metal Oxide
R4436	VRS-CZ1JF103JY	AA		J	Resistor 10k 1/16W Metal Oxide
R4437	VRS-CZ1JF000JY	AA		J	Resistor 0 1/16W Metal Oxide
R4438	VRS-CZ1JF103JY	AA		J	Resistor 10k 1/16W Metal Oxide
R4439	VRS-CZ1JF470JY	AA		J	Resistor 47 1/16W Metal Oxide
R4440	VRS-CZ1JF470JY	AA		J	Resistor 47 1/16W Metal Oxide
R4441	VRS-CZ1JF103JY	AA		J	Resistor 10k 1/16W Metal Oxide
R4442	VRK-SB1FF470JY	AA		J	Resistor 47 1/32W Metal Composition
R4443	VRK-SB1FF470JY	AA		J	Resistor 47 1/32W Metal Composition
R4444	VRK-SB1FF470JY	AA		J	Resistor 47 1/32W Metal Composition
R4445	VRK-SB1FF470JY	AA		J	Resistor 47 1/32W Metal Composition
R4446	VRK-SB1FF470JY	AA		J	Resistor 47 1/32W Metal Composition
R4447	VRK-SB1FF470JY	AA		J	Resistor 47 1/32W Metal Composition
R4448	VRS-CZ1JF470JY	AA		J	Resistor 47 1/16W Metal Oxide
R4449	VRS-CZ1JF470JY	AA		J	Resistor 47 1/16W Metal Oxide
R4450	VRS-CZ1JF470JY	AA		J	Resistor 47 1/16W Metal Oxide
R4451	VRS-CZ1JF105JY	AA		J	Resistor 1M 1/16W Metal Oxide
R4452	VRS-CZ1JF000JY	AA		J	Resistor 0 1/16W Metal Oxide
R4453	VRS-CZ1JF472JY	AA		J	Resistor 4.7k 1/16W Metal Oxide
R4455	VRS-CZ1JF472JY	AA		J	Resistor 4.7k 1/16W Metal Oxide
R4456	VRS-CZ1JF472JY	AA		J	Resistor 4.7k 1/16W Metal Oxide
R4457	VRS-CZ1JF000JY	AA		J	Resistor 0 1/16W Metal Oxide
R4458	VRK-SB1FF470JY	AA		J	Resistor 47 1/32W Metal Composition
R4459	VRS-CZ1JF470JY	AA		J	Resistor 47 1/16W Metal Oxide
R4460	VRS-CZ1JF222JY	AA		J	Resistor 2.2k 1/16W Metal Oxide
R4461	VRK-SB1FF472JY	AA		J	Resistor 4.7k 1/32W Metal Composition
R4462	VRS-CZ1JF101JY	AA		J	Resistor 100 1/16W Metal Oxide
R4463	VRS-CZ1JF101JY	AA		J	Resistor 100 1/16W Metal Oxide
R4464	VRS-CZ1JF000JY	AA		J	Resistor 0 1/16W Metal Oxide
R4466	VRS-CZ1JF103JY	AA		J	Resistor 10k 1/16W Metal Oxide
R4467	VRK-SB1FF470JY	AA		J	Resistor 47 1/32W Metal Composition
R4468	VRK-SB1FF470JY	AA		J	Resistor 47 1/32W Metal Composition
R4469	VRK-SB1FF470JY	AA		J	Resistor 47 1/32W Metal Composition
R4470	VRK-SB1FF220JY	AA		J	Resistor 22 1/32W Metal Composition
R4471	VRK-SB1FF220JY	AA		J	Resistor 22 1/32W Metal Composition
R4472	VRK-SB1FF220JY	AA		J	Resistor 22 1/32W Metal Composition
R4473	VRK-SB1FF100JY	AA		J	Resistor 10 1/32W Metal Composition
R4474	VRK-SB1FF100JY	AA		J	Resistor 10 1/32W Metal Composition
R4475	VRK-SB1FF100JY	AA		J	Resistor 10 1/32W Metal Composition
R4477	VRS-CZ1JF000JY	AA		J	Resistor 0 1/16W Metal Oxide
R4482	VRS-CZ1JF101JY	AA		J	Resistor 100 1/16W Metal Oxide
R4483	VRS-CZ1JF470JY	AA		J	Resistor 47 1/16W Metal Oxide
R4484	VRS-CZ1JF470JY	AA		J	Resistor 47 1/16W Metal Oxide
R4485	VRS-CZ1JF470JY	AA		J	Resistor 47 1/16W Metal Oxide
R4486	VRS-CZ1JF470JY	AA		J	Resistor 47 1/16W Metal Oxide
R4487	VRS-CZ1JF101JY	AA		J	Resistor 100 1/16W Metal Oxide
R4488	VRS-CZ1JF100JY	AA		J	Resistor 10 1/16W Metal Oxide
R4489	VRS-CZ1JF100JY	AA		J	Resistor 10 1/16W Metal Oxide
R8405	VRS-CZ1JF103JY	AA		J	Resistor 10k 1/16W Metal Oxide
R8406	VRK-SB1FF103JY	AA		J	Resistor 10k 1/32W Metal Composition
R8407	VRK-SB1FF000JY	AA		J	Resistor 0 1/32W Metal Composition
R8408	VRS-CZ1JF000JY	AA		J	Resistor 0 1/16W Metal Oxide
R8409	VRS-CZ1JF000JY	AA		J	Resistor 0 1/16W Metal Oxide
R8451	VRS-CZ1JF470JY	AA		J	Resistor 47 1/16W Metal Oxide
R8452	VRS-CZ1JF472JY	AA		J	Resistor 4.7k 1/16W Metal Oxide
R8453	VRS-CZ1JF472JY	AA		J	Resistor 4.7k 1/16W Metal Oxide
R8454	VRS-CZ1JF472JY	AA		J	Resistor 4.7k 1/16W Metal Oxide
R8455	VRS-CZ1JF472JY	AA		J	Resistor 4.7k 1/16W Metal Oxide
R8458	VRK-SB1FF470JY	AA		J	Resistor 47 1/32W Metal Composition
R8459	VRK-SB1FF470JY	AA		J	Resistor 47 1/32W Metal Composition
R8462	VRS-CZ1JF000JY	AA		J	Resistor 0 1/16W Metal Oxide
R8463	VRS-CZ1JF000JY	AA		J	Resistor 0 1/16W Metal Oxide
R8465	VRS-CZ1JF472JY	AA		J	Resistor 4.7k 1/16W Metal Oxide
R8466	VRS-CZ1JF472JY	AA		J	Resistor 4.7k 1/16W Metal Oxide
R8467	VRS-CZ1JF472JY	AA		J	Resistor 4.7k 1/16W Metal Oxide
R8468	VRS-CZ1JF472JY	AA		J	Resistor 4.7k 1/16W Metal Oxide
R8469	VRK-SB1FF472JY	AA		J	Resistor 4.7k 1/32W Metal Composition
R8472	VRK-SA1JF222JY	AB		J	Resistor 2.2k 1/16W Metal Composition
R8477	VRS-CZ1JF472JY	AA		J	Resistor 4.7k 1/16W Metal Oxide
R8478	VRS-CZ1JF472JY	AA		J	Resistor 4.7k 1/16W Metal Oxide
R8479	VRS-CZ1JF473JY	AA		J	Resistor 47k 1/16W Metal Oxide
R8480	VRK-SA1JF100JY	AB		J	Resistor 10 1/16W Metal Composition
R8481	VRS-CZ1JF332JY	AA		J	Resistor 3.3k 1/16W Metal Oxide
R8482	VRS-CZ1JF472JY	AA		J	Resistor 4.7k 1/16W Metal Oxide
R8485	VRK-SA1JF000JY	AB		J	Resistor 0 1/16W Metal Composition
R8487	VRS-CZ1JF102JY	AA		J	Resistor 1k 1/16W Metal Oxide
R9501	VRS-CZ1JF750FY	AA		J	Resistor 75 1/16W Metal Oxide
R9502	VRS-CZ1JF750FY	AA		J	Resistor 75 1/16W Metal Oxide
R9503	VRS-CZ1JF750FY	AA		J	Resistor 75 1/16W Metal Oxide
R9504	VRS-CZ1JF750FY	AA		J	Resistor 75 1/16W Metal Oxide
R9507	VRS-CZ1JF133JY	AA		J	Resistor 13k 1/16W Metal Oxide
R9508	VRS-CZ1JF133JY	AA		J	Resistor 13k 1/16W Metal Oxide
R9510	VRS-CZ1JF472JY	AA		J	Resistor 4.7k 1/16W Metal Oxide
R9511	VRS-CZ1JF472JY	AA		J	Resistor 4.7k 1/16W Metal Oxide
R9512	VRK-SB1FF000JY	AA		J	Resistor 0 1/32W Metal Composition

NO.	PARTS CODE	PRICE RANK	NEW MARK	PART DELIVERY	DESCRIPTION
[2] DKEYDF455FM07 (MAIN Unit)					
R9513	VRS-CZ1JF000JY	AA		J	Resistor 0 1/16W Metal Oxide
R9514	VRS-CZ1JF000JY	AA		J	Resistor 0 1/16W Metal Oxide
R9515	VRS-CZ1JF220JY	AA		J	Resistor 22 1/16W Metal Oxide
R9516	VRS-CZ1JF000JY	AA		J	Resistor 0 1/16W Metal Oxide
R9517	VRS-CZ1JF220JY	AA		J	Resistor 22 1/16W Metal Oxide
R9518	VRS-CZ1JF000JY	AA		J	Resistor 0 1/16W Metal Oxide
R9519	VRS-CZ1JF000JY	AA		J	Resistor 0 1/16W Metal Oxide
R9520	VRS-CZ1JF000JY	AA		J	Resistor 0 1/16W Metal Oxide
R9521	VRS-CZ1JF000JY	AA		J	Resistor 0 1/16W Metal Oxide
R9522	VRS-CZ1JF000JY	AA		J	Resistor 0 1/16W Metal Oxide
R9523	VRK-SB1FF000JY	AA		J	Resistor 0 1/32W Metal Composition
R9524	VRS-CZ1JF510FY	AA		J	Resistor 51 1/16W Metal Oxide
R9525	VRS-CZ1JF510FY	AA		J	Resistor 51 1/16W Metal Oxide
R9526	VRS-CZ1JF510FY	AA		J	Resistor 51 1/16W Metal Oxide
R9527	VRS-CZ1JF510FY	AA		J	Resistor 51 1/16W Metal Oxide
R9601	VRS-CZ1JF103JY	AA		J	Resistor 10k 1/16W Metal Oxide
R9602	VRS-CZ1JF103JY	AA		J	Resistor 10k 1/16W Metal Oxide
R9607	VRS-CZ1JF102JY	AA		J	Resistor 1k 1/16W Metal Oxide
R9610	VRS-CZ1JF472JY	AA		J	Resistor 4.7k 1/16W Metal Oxide
R9615	VRS-CZ1JF472JY	AA		J	Resistor 4.7k 1/16W Metal Oxide
R9616	VRS-CZ1JF103JY	AA		J	Resistor 10k 1/16W Metal Oxide
R9620	VRS-CZ1JF272FY	AA		J	Resistor 2.7k 1/16W Metal Oxide
R9621	VRS-CZ1JF103FY	AB		J	Resistor 10k 1/16W Metal Oxide
R9623	VRS-CZ1JF393JY	AA		J	Resistor 39k 1/16W Metal Oxide
R9626	VRS-CZ1JF101JY	AA		J	Resistor 100 1/16W Metal Oxide
R9627	VRS-CZ1JF562JY	AA		J	Resistor 5.6k 1/16W Metal Oxide
R9628	VRS-CZ1JF473FY	AA		J	Resistor 47k 1/16W Metal Oxide
R9629	VRS-CZ1JF103FY	AB		J	Resistor 10k 1/16W Metal Oxide
R9630	VRS-CZ1JF153FY	AA		J	Resistor 15k 1/16W Metal Oxide
R9631	VRS-CZ1JF103FY	AB		J	Resistor 10k 1/16W Metal Oxide
R9632	VRS-CZ1JF272JY	AA		J	Resistor 2.7k 1/16W Metal Oxide
R9633	VRS-CZ1JF101JY	AA		J	Resistor 100 1/16W Metal Oxide
R9634	VRS-CZ1JF100JY	AA		J	Resistor 10 1/16W Metal Oxide
R9635	VRS-CZ1JF332JY	AA		J	Resistor 3.3k 1/16W Metal Oxide
R9636	VRS-CZ1JF103JY	AA		J	Resistor 10k 1/16W Metal Oxide
R9637	VRS-CZ1JF100JY	AA		J	Resistor 10 1/16W Metal Oxide
R9638	VRS-CZ1JF563FY	AA		J	Resistor 56k 1/16W Metal Oxide
R9639	VRS-CZ1JF272JY	AA		J	Resistor 2.7k 1/16W Metal Oxide
R9640	VRS-CZ1JF103FY	AB		J	Resistor 10k 1/16W Metal Oxide
R9641	VRS-CZ1JF100JY	AA		J	Resistor 10 1/16W Metal Oxide
R9643	VRS-CZ1JF101JY	AA		J	Resistor 100 1/16W Metal Oxide
R9645	VRS-CZ1JF102JY	AA		J	Resistor 1k 1/16W Metal Oxide
R9646	VRS-CZ1JF000JY	AA		J	Resistor 0 1/16W Metal Oxide
R9648	VRS-CZ1JF332JY	AA		J	Resistor 3.3k 1/16W Metal Oxide
R9650	VRS-CZ1JF101JY	AA		J	Resistor 100 1/16W Metal Oxide
R9652	VRS-CZ1JF100JY	AA		J	Resistor 10 1/16W Metal Oxide
R9656	VRS-CZ1JF101JY	AA		J	Resistor 100 1/16W Metal Oxide
R9657	VRS-CZ1JF823FY	AA		J	Resistor 82k 1/16W Metal Oxide
R9658	VRS-CZ1JF153FY	AA		J	Resistor 15k 1/16W Metal Oxide
R9665	VRS-CZ1JF101JY	AA		J	Resistor 100 1/16W Metal Oxide
R9677	VRS-CZ1JF101JY	AA		J	Resistor 100 1/16W Metal Oxide
R9687	VRS-CZ1JF000JY	AA		J	Resistor 0 1/16W Metal Oxide
R9688	VRS-CZ1JF821JY	AA		J	Resistor 820 1/16W Metal Oxide
R9689	VRS-CZ1JF3R9JY	AA		J	Resistor 3.9 1/16W Metal Oxide
R9696	VRS-CZ1JF472JY	AA		J	Resistor 4.7k 1/16W Metal Oxide
SC501	QSOCNA886WJQZ		N	S	Socket
SC504	QSOCNA887WJQZ		N	S	Socket
SC505	QSOCZA211WJQZY		N	S	Socket
SC1501	QSOCZA220WJQZY	AE		J	Socket
SC1502	QSOCZA220WJQZY	AE		J	Socket
SC1503	QSOCZA220WJQZY	AE		J	Socket
SC1505	QSOCZA220WJQZY	AE		J	Socket
SC4401	QCNCMA332WJSA		N	S	Socket
SC8454	QSOCZA050WJZZY	AH		J	Socket
T9501	RTRNZA129WJQZY	AH		J	Transformer
TH2002	VHHM1103J15-1Y	AB		J	Thermistor
⚠ TU1101	RTUDAA053WJQZ		N	S	Tuner
⚠ TU1301	RTUDSA023WJQZ		N	S	Tuner
VA506	RH-VXA005WJZZY	AA		J	Varistor AVR-M1005C270MTABB
VA507	RH-VXA005WJZZY	AA		J	Varistor AVR-M1005C270MTABB
VA508	RH-VXA005WJZZY	AA		J	Varistor AVR-M1005C270MTABB
VA509	RH-VXA005WJZZY	AA		J	Varistor AVR-M1005C270MTABB
VA510	RH-VXA005WJZZY	AA		J	Varistor AVR-M1005C270MTABB
VA3301	RH-VXA074WJZZY	AB		J	Varistor AVRL101A1R1NTB
VA3302	RH-VXA074WJZZY	AB		J	Varistor AVRL101A1R1NTB
X1101	RCRSCA205WJQZY	AD		J	Crystal
X2001	RCRSC0032TAZZY	AG		J	Crystal
X2002	RFiLZA023WJQZY	AD		J	Crystal
X2701	RCRSCA161WJQZY	AE		J	Crystal
X3302	RCRSCA205WJQZY	AD		J	Crystal
X4401	RCRSCA205WJQZY	AD		J	Crystal
X9501	RCRSCA219WJQZY		N	S	Crystal
N	LHLDZB633WJKZ		N	S	SD Card Cover
N	PSPAZC432WJKZ		N	S	Cooling Sheet
N	UiMC-A009WJZZ		N	S	SD Memory Card

NO.	PARTS CODE	PRICE RANK	NEW MARK	PART DELIVERY	DESCRIPTION
[3] DUNTKF494FM02 (R/C, LED Unit)					
C101	VCKYCY1HB103KY	AA		J	Capacitor 0.01 50V Ceramic
C103	RC-KZA385WJZZY	AD		J	Capacitor 22 6.3V Ceramic
C104	RC-KZA385WJZZY	AD		J	Capacitor 22 6.3V Ceramic
C105	RC-KZA616WJQZY	AB		J	Capacitor 10 10V Ceramic
D104	RH-EXA633WJQZY	AA		J	Zener Diode RKZ5.6B2KG
IC101	VHiGA1S100W-1Y	AE		J	IC GA1A1S100WP
P103	QPLGNA325WJZZY	AC		J	Plug
R106	VRS-CY1JF223JY	AA		J	Resistor 22k 1/16W Metal Oxide
R113	VRS-CY1JF000JY	AA		J	Resistor 0 1/16W Metal Oxide
R120	VRS-CY1JF101JY	AA		J	Resistor 100 1/16W Metal Oxide
RMC101	RRMCUA053WJZZ	AE		J	Remote Receiver
SLD101	PSLDPA076WJFW	AD		J	Shield
[4] DUNTKF493FM03 (ICON Unit)					
D203	RH-PXA153WJZZY	AF		J	LED SMLE12WBX7W1
D204	RH-PXA153WJZZY	AF		J	LED SMLE12WBX7W1
P202	QPLGNA336WJZZY		N	S	Plug
R203	VRS-TV1JD131JY		N	S	Resistor 130 1/10W Metal Oxide
R204	VRS-TV1JD131JY		N	S	Resistor 130 1/10W Metal Oxide
[5] DUNTKF493FM04 (LOGO Unit)					
D202	RH-PXA153WJZZY	AF		J	LED SMLE12WBX7W1
D203	RH-PXA153WJZZY	AF		J	LED SMLE12WBX7W1
D204	RH-PXA153WJZZY	AF		J	LED SMLE12WBX7W1
P201	QPLGNA337WJZZY	AC		J	Plug
R202	VRS-TV1JD131JY	AA		J	Resistor 130 1/16W Metal Oxide
R203	VRS-TV1JD131JY	AA		J	Resistor 130 1/16W Metal Oxide
R204	VRS-TV1JD131JY	AA		J	Resistor 130 1/16W Metal Oxide

SHARP

COPYRIGHT © 2010 BY SHARP CORPORATION

ALL RIGHTS RESERVED.

No Part of this publication may be reproduced,
stored in a retrieval system, or transmitted in
any from or by any means, electronic, mechanical,
photocopying, recording, or otherwise, without
prior written permission of the publisher.

Sep. 2010
SH. DS

SHARP CORPORATION
AV Systems Group
CS Promotion Center
Yaita,Tochigi 329-2193, Japan

SHARP SERVICE MANUAL

No. S90L660LE822E

LCD COLOUR TELEVISION

LCD Module Edition

MODELS LC-60LE822E LC-60LE822ERU

In the interests of user-safety (Required by safety regulations in some countries) the set should be restored to its original condition and only parts identical to those specified should be used.

CONTENTS

OUTLINE

CHAPTER 1. Removing LCD Module
[1] Removing LCD Module 1-1

CHAPTER 2. Handling Notes LCD Module
[1] Fix the LED-PWB at the LED PWB Angle 2-1
[2] Peel off the Lamination Film 2-2

Parts Guide

Parts marked with "⚠" are important for maintaining the safety of the set. Be sure to replace these parts with specified ones for maintaining the safety and performance of the set.

SHARP CORPORATION

This document has been published to be used for after sales service only.
The contents are subject to change without notice.

OUTLINE

• Information of service parts in the LCD Module

Unit

Model Name	Unit name	Description
LC-60LE822E LC-60LE822ERU	R1LK600D3LW20Z	60” LCD Panel Module unit

NOTE: When replacing the LCD control PWB, perform the VCOM adjustment.

CHAPTER 1. Removing LCD Module

[1] Removing LCD Module

1. Remove the 40 lock screws ①, 21 lock screws ② and detach the Bezel Ass'y
2. Detach the Bezel Unit (Top) ③ and Bezel Unit (Bottom) ④.
3. Detach the Bezel Unit (Left/Right) ⑤.
4. Detach the P Chassis Unit (Top) ⑥ and P Chassis Unit (Bottom) ⑦.
5. Detach the P Chassis Unit (Left/Right) ⑧ and DBEF Sheet ⑨.
6. Detach the Lens Sheet ⑩ and Micro Lens Sheet ⑪.
7. Detach the Light Guide Plate ⑫ andReflection Sheet ⑬.
8. Detach the Reflection Sheet ⑭ and Back Light Chassis Unit ⑮.

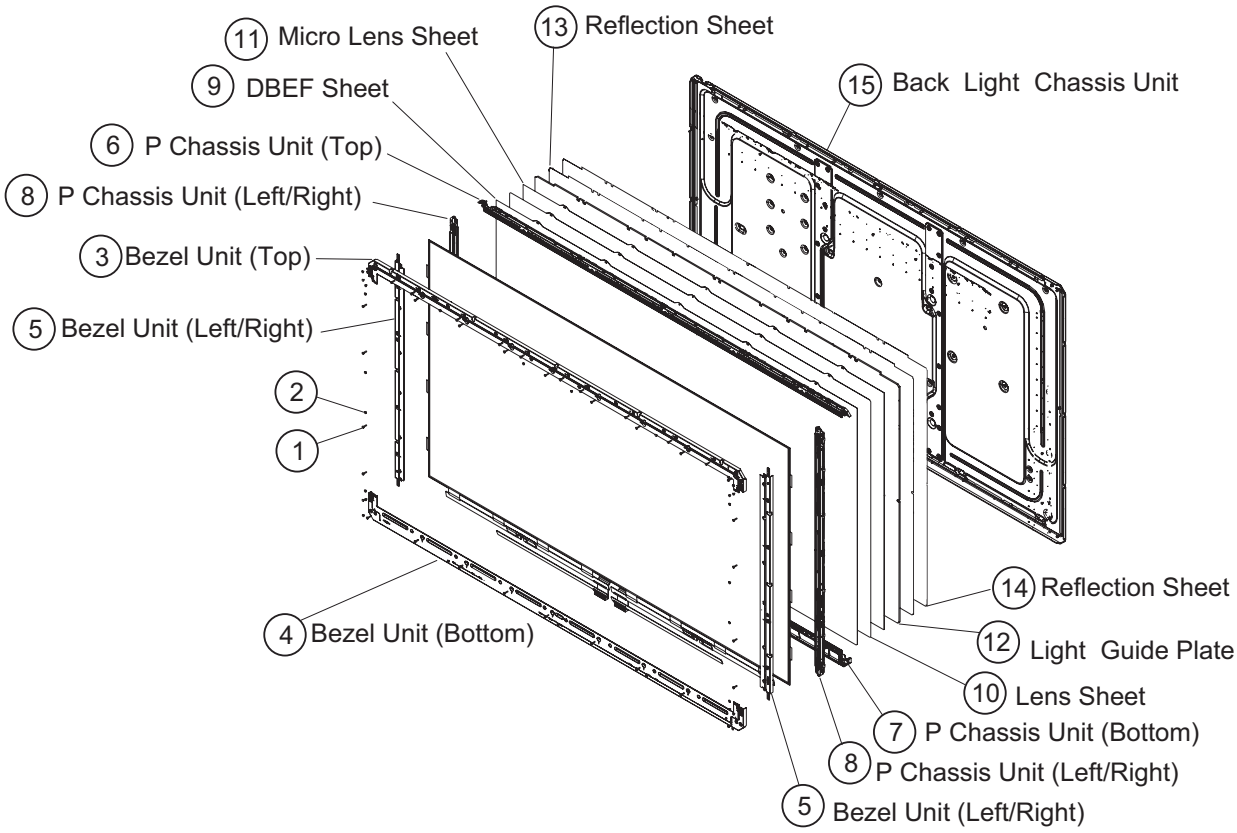

CHAPTER 2. Handling Notes LCD Module

[1] Fix the LED-PWB at the LED PWB Angle

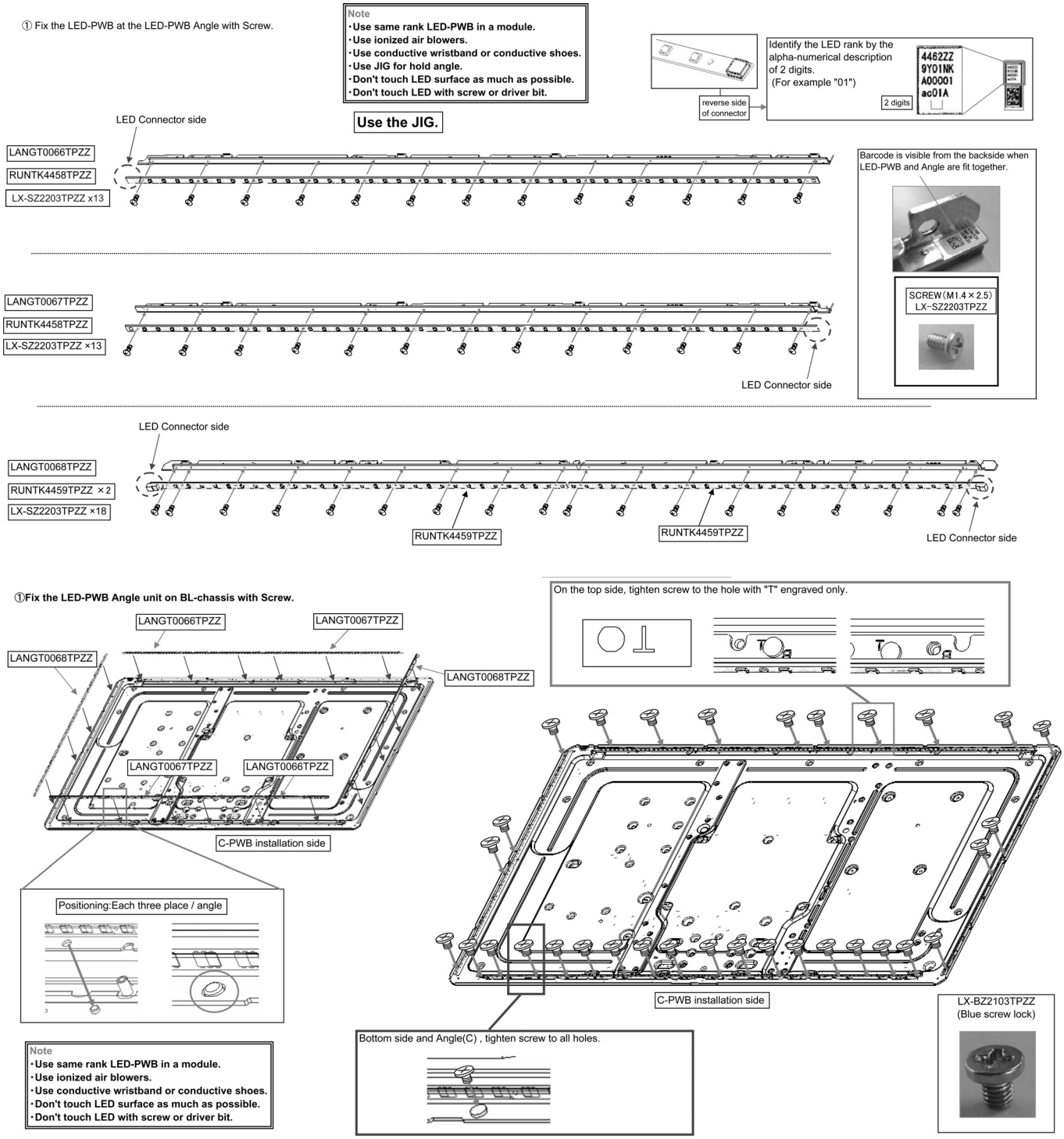

[2] Peel off the Lamination Film

① Fit diffusion sheet.
② Peel off the lamination film (front) and Fit Lens sheet.
③ Fit DBEF sheet

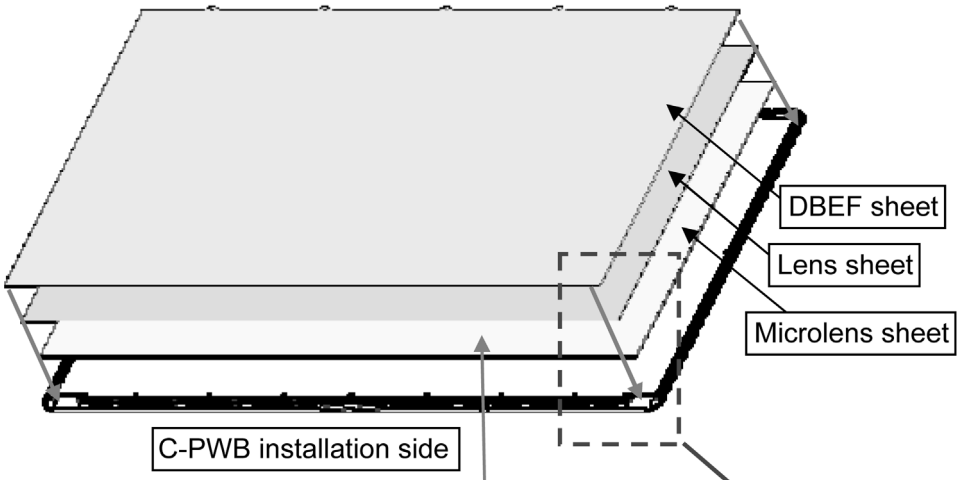

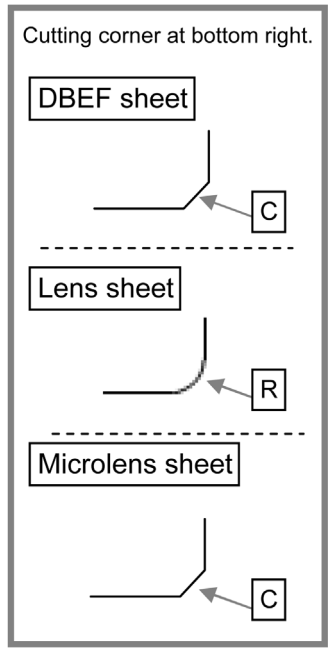

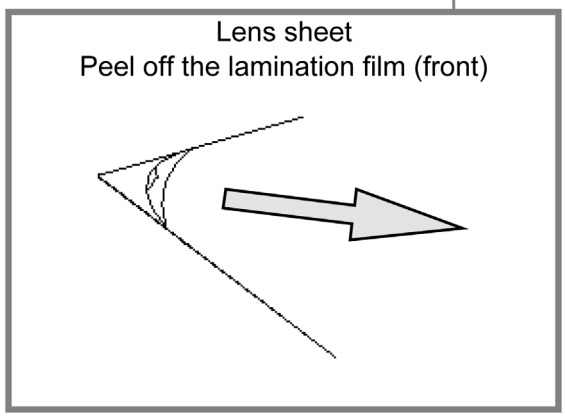

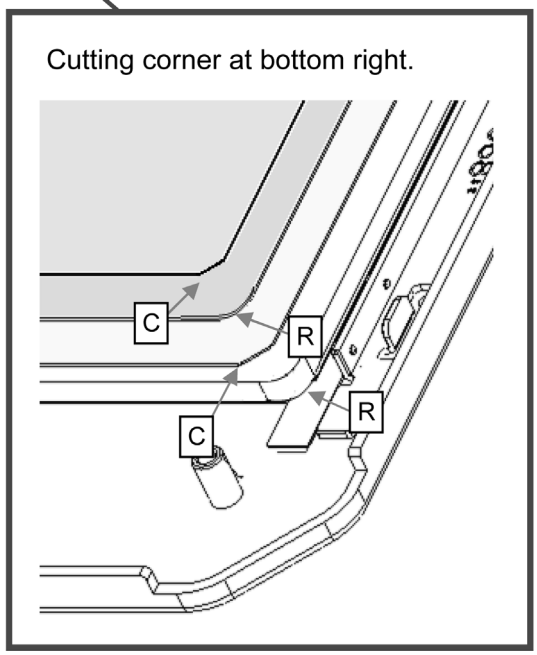

— MEMO —

SHARP PARTS GUIDE

No. S90L660LE822E

LCD COLOUR TELEVISION

MODELS LC-60LE822E LC-60LE822ERU

CONTENTS

[1] LCD PANEL MODULE UNIT

Parts marked with "⚠" are important for maintaining the safety of the set. Be sure to replace these parts with specified ones for maintaining the safety and performance of the set.

SHARP CORPORATION

This document has been published to be used for after sales service only.
The contents are subject to change without notice.

[1] LCD PANEL MODULE UNIT

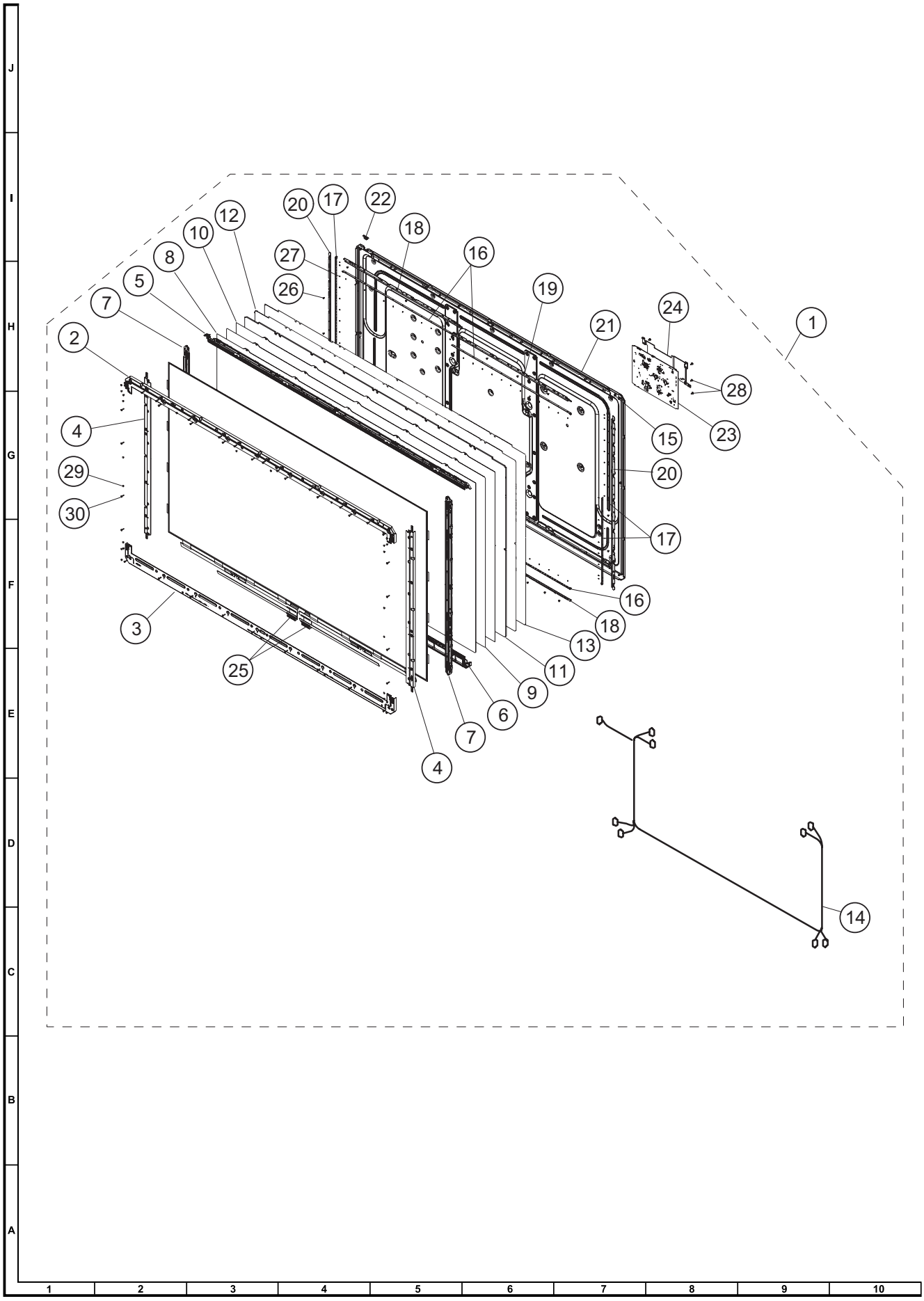

NO.	PARTS CODE	PRICE RANK	NEW MARK	PART DELIVERY	DESCRIPTION
[1] LCD PANEL MODULE UNIT					
1	R1LK600D3LW20Z	ET	N	S	60" LCD Panel Module Unit
2	CANGK4596TP02		N	X	Bezel Unit (Top)
3	CANGK4597TP02		N	X	Bezel Unit (Bottom)
4	CANGK4598TP02		N	X	Bezel Unit (Left/Right), x2
5	CHLDZ4423TP01		N	X	P Chassis Unit (Top)
6	CHLDZ4424TP01		N	X	P Chassis Unit (Bottom)
7	CHLDZ4425TP01		N	X	P Chassis Unit (Left/Right), x2
8	PÖFMD0378TPZZ		N	X	DBEF Sheet
9	PÖFMA0921TPZZ		N	X	Lens Sheet
10	PSLDK3247TPZZ		N	X	Micro Lens Sheet
11	PLGPA0523TPZZ		N	X	Light Guide Plate
12	PREFL2900TPZZ		N	X	Reflection Sheet
13	PREFL3049TPZZ		N	X	Reflection Sheet
14	QCNWN2438TPZZ		N	X	LED Cable
15	LHLDWA300WJKZ		N	X	Wire Holder, x3
16	RUNTK4458TPZZ		N	X	LED-PWB A
17	RUNTK4459TPZZ		N	X	LED-PWB B
18	LANGT0066TPZZ		N	X	LED Angle A, x2
19	LANGT0067TPZZ		N	X	LED Angle B, x2
20	LANGT0068TPZZ		N	X	LED Angle C, x2
21	CCHSM0106TP01		N	X	Back Light Chassis Unit
22	PCUSG3392TPZZ		N	X	Cushion Rubber
23	RUNTK4512TPZA	BV	N	X	C-PWB
24	PRDARA883WJFW		N	X	C-PWB Cover
25	QPWBM1007TPZZ		N	X	CS-FFC
26	LX-BZ2103TPZZ		N	X	Screw, x32
27	LX-SZ2203TPZZ		N	X	Screw, x88
28	XBPS730P08KS0		N	X	Screw, x6
29	LX-EZ0002TPZZ		N	X	Screw, x21
30	LX-BZA236WJF7		N	X	Screw, x40

SHARP

COPYRIGHT © 2010 BY SHARP CORPORATION

ALL RIGHTS RESERVED.

No Part of this publication may be reproduced,
stored in a retrieval system, or transmitted in
any from or by any means, electronic, mechanical,
photocopying, recording, or otherwise, without
prior written permission of the publisher.

Sep. 2010
SH. DS

SHARP CORPORATION
AV Systems Group
CS Promotion Center
Yaita,Tochigi 329-2193, Japan